AD-A097 606 ROYAL AIRCRAFT ESTABLISHMENT FARNBOROUGH (ENGLAND) F/G 20/4
AN AUTOMATIC WAKE-TRAVERSE SYSTEM FOR FLOW-FIELD MEASUREMENTS I--ETC(U)
JUN 80 D A LOVELL
UNCLASSIFIED RAE-TR-80078 DRIC-BR-77762 NL

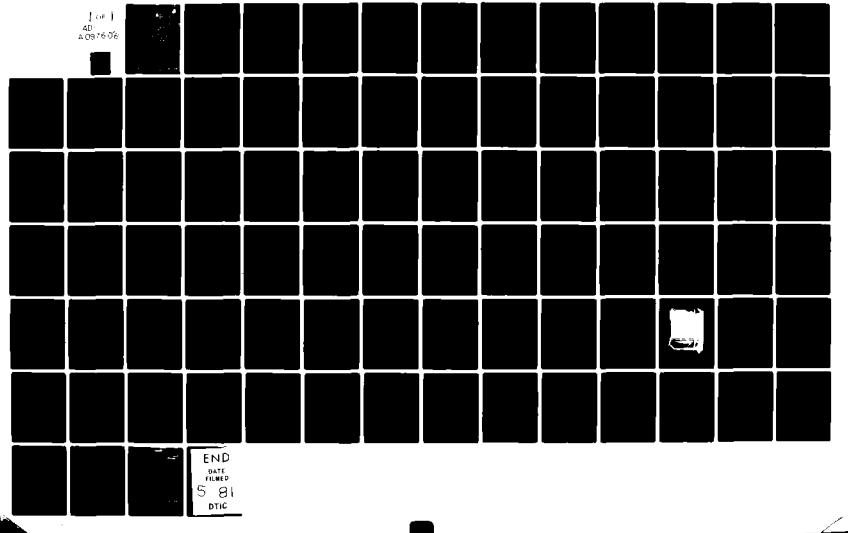

END
DATE FILMED
5 81
DTIC

UNLIMITED

TR 80078

AD A097606

LEVEL II

ROYAL AIRCRAFT ESTABLISHMENT

DTIC
ELECTE
APR 10 1981
S
D
E

*

(14) RAE-TR-80078

(9) Technical Report

(11) June 1980

(6)

AN AUTOMATIC WAKE-TRAVERSE SYSTEM FOR FLOW-FIELD MEASUREMENTS IN LARGE LOW-SPEED WIND TUNNELS

(12) 87

by

(10) D.A. Lovell

(18) DRIC

(19) BR-77762

*

Procurement Executive, Ministry of Defence
Farnborough, Hants

DTIC FILE COPY

310450

UDC 533.6.08 : 533.6.071 : 533.6.011.327.34

ROYAL AIRCRAFT ESTABLISHMENT

Technical Report 80078

Received for printing 3 June 1980

AN AUTOMATIC WAKE-TRAVERSE SYSTEM FOR FLOW-FIELD MEASUREMENTS IN LARGE LOW-SPEED WIND TUNNELS

by

D. A. Lovell

SUMMARY

The development of a computer-controlled system for making extensive measurements of flow fields is described. The nature and operation of the principal hardware components, a Cartesian traverse system, a velocity vector measurement system, and the interfaces to allow control of these devices by a computer, are outlined. The associated software for control and data handling is briefly described. The significance of corrections to be applied to the measured flow properties is discussed and, on the basis of some preliminary experimental results, an assessment is made of the typical accuracy of measurement that may be obtained with the system. The system has a capability of making 100 measurements of flow vectors per hour, with a minimum of operator intervention, and thus provides a powerful new tool for the experimental aerodynamicist.

Departmental Reference: Aero 3487

Copyright
©
Controller HMSO London
1980

Accession For
NTIS
DTIC
A

LIST OF CONTENTS

		Page
1	INTRODUCTION	3
	1.1 Requirements	3
	1.2 The principal components	6
	1.3 Chronology and resources	7
2	THE CARTESIAN TRAVERSE SYSTEM	8
	2.1 Mechanical design	8
	2.2 Control system	10
3	THE QUADRANT AND ROLL PROBE UNIT	11
	3.1 Mechanical design	11
	3.2 Control system	13
4	PRESSURE MEASUREMENT AND THE PROBE-CONTROL SERVOMECHANISMS	14
	4.1 Pressure measurement	14
	4.2 The probe-control servomechanisms	16
5	INTERFACING OF THE MANUAL CONTROL SYSTEMS TO THE COMPUTER	18
	5.1 General	18
	5.2 The interface for the Cartesian traverse control system	19
	5.3 The interface for the quadrant and roll control unit	21
	5.4 The interface for analogue inputs	23
	5.5 The interface for the analogue plotter	24
6	COMPUTER SOFTWARE	25
	6.1 General	25
	6.2 Software for controlling the wake-traverse equipment	26
	6.2.1 The use of the programmable clock	31
	6.2.2 Automatic control of the quadrant and roll units	31
	6.2.3 Protection of data and error handling	34
	6.3 Software for test preparation, data reduction and file services	35
	6.3.1 Test preparation	36
	6.3.2 Data reduction	37
	6.3.3 File services	40
7	INITIAL TESTING OF THE TRAVERSE SYSTEM	41
8	CONCLUDING REMARKS	45
Acknowledgments		46
Appendix	The derivation of the flow pitch and yaw angles from the measured quadrant and roll angles	49
Tables 1 to 8		52
List of symbols		63
References		64
Illustrations		Figures 1-19
Report documentation page		inside back cover

078

1 INTRODUCTION

The continually rising cost of designing and developing a new aircraft project has increased the benefits to be obtained from the availability of accurate and comprehensive design data at an early stage in the design process. Whereas in the past it has been customary during research and development to restrict wind-tunnel testing of aircraft models largely to the measurement of overall forces and surface pressure distributions, it is now essential to examine the flow fields around such models in detail. Measurements of this nature can lead to a better understanding of, for example, the components of the drag force experienced by an aircraft, the environment of an empennage, or the entry flow experienced by an engine. These problems are either not easily amenable to mathematical modelling or the theoretical models required are prohibitively complex.

This Report describes an automatic flow-field survey system that was developed to provide a facility for making detailed flow measurements in the large low-speed wind tunnels at RAE[1]. The requirements for such a system are outlined below, section 1.1, and the principal components are then briefly described, section 1.2. This section concludes with some comments on the chronology of events in the development of the system and the resources utilised (section 1.3). The main body of the Report contains a more detailed description of the hardware and software of the system and some remarks on the initial use of the system.

1.1 Requirements

As initially conceived the requirements for a flow-field survey system were:

(1) Accurate and rapid positioning of a measurement probe within a large proportion of the working section of a wind tunnel. (A resolution of 0.02 mm on position location was specified.) An axis system corresponding to the normal aircraft wind axes was preferred in order to minimise any transformation of coordinates.

(2) An ability to survey regions of the flow in close proximity to an aircraft model.

(3) A high precision of angular measurement (better than 0.05^{o} was specified). This effectively implied the use of a nulling instrument.

(4) Rapid and high precision of measurement of pressures (typically at 500 points). It was anticipated that this would rule out any possibility of multiplexing.

078

(5) Minimum interference with the flow round a wind-tunnel model. This implied that the support structure for the measurement probe should be of minimum size, be well removed from the probe and, as far as possible, be symmetrically disposed with respect to the probe.

(6) In order to make extensive flow measurements without undue fatigue for the user, the control system should have a rapid, automatic response, require minimum operator intervention and be capable of quick reversion to manual operation.

(7) A data logging capability so that data processing could be done automatically.

(8) A high reliability as it was envisaged that the system would be used continuously for several hours at a time.

On this basis design work was begun. However concurrently with this work Maskell had proposed and developed[2] an experimental method aimed at separating the components of drag on an aircraft model. The early results of this work[2] were sufficiently encouraging to warrant the extension of the technique to the larger scale necessary to measure sufficient detail of the wake from a model representative of current aircraft in the take-off and landing phases of flight. It was estimated that it would now be necessary to measure the local flow velocity vector at approximately 5000 points in a cross-flow plane whereas the initial design requirement had assumed a typical traverse of 500 points. Accordingly:

(1) A target for the maximum rate of traverse measurements of 100 points per hour was set.

(2) A more stringent target of 0.02^{o} for the precision of angular measurement was set as this was directly related to the accuracy of determining vortex drag.

(3) A more comprehensive control system for positioning the probe was defined. Facilities to allow automatic checking for errors and their correction (where possible) were necessary. This implied modifying the design of the open-loop system already defined to include some position monitoring (*ie* closed-loop operation).

(4) It was necessary to reduce the degree of manual intervention required in the control of angular measurement. From experience with the servomechanism developed to meet the original requirement it was anticipated that direct computer control would also be necessary.

078

(5) Reduction of the degree of user involvement in overall test control, by transferring routine functions to computer control, was necessary.

(6) Incorporation of some means of displaying data to ensure adequate monitoring of the flow survey at the high rates of traversing proposed was now required.

(7) Some limited data processing was required in order to aid the definition of subsequent stages of traverse measurements. To obtain a reasonably rapid response this implied the use of a magnetic storage medium for the data and the provision of sufficient computing power in the computer used for the control and data acquisition tasks.

(8) The requirements (3) to (7) above entailed considerably more software than the original specification. Hence the computer system chosen should provide a good software development capability.

(9) In view of the desirability of the future extension of the drag analysis techniques of Maskell to the new 5 m pressurised, low-speed, wind tunnel[1] at RAE, it was necessary to consider the compatability of the computer for the wake-traverse system with those proposed for the 5m tunnel.

Because of the importance of the computer software in the operation of the wake-traverse system, the following requirements specifically related to software should be mentioned:

(1) Hardware was required that was easy to program as there were many events to initiate, monitor, stop etc.

(2) Good operating-system software was necessary. All the basic functions (compilers, editors etc) should be present in the proprietary software of the computer manufacturer.

(3) The software structure should minimise the time spent on handling control functions (so as to attain the maximum rate of traverse) with tasks not essential to control being relegated to a background program. Analysis of the events to be handled by the control program showed that a simple cycle of events could be defined so that a multi-task operating system for the computer was not necessary. This analysis also indicated the size of core storage required for the computer.

(4) A software structure was required that gave straightforward operation from the viewpoint of the user.

078

(5) Interoperability between the assembler programming language (necessary for the real-time control functions) and FORTRAN, the standard programming language used at RAE for scientific computing, was essential.

(6) Ease of design as a modular system was important. Because the application was innovatory it was not possible to define with any finality the details of all the control and processing requirements. Changes to the software were expected as experience with the technique grew. Thus it was particularly necessary to separate functions for programming. Ideally real-time control functions should be confined to modules having the appearance of FORTRAN subroutines.

(7) Provision of software for checking hardware, consistency of user instructions, and the quality of data acquired was necessary, in order to relieve the workload on the user. Associated with this was the need to minimise the loss of data in the event of a breakdown in the system.

1.2 The principal components

A three-axis Cartesian traverse system is used to position the measurement probe (Fig 1). This system was designed and manufactured by TEM Ltd. The lateral traverse axes are outermost (Y axis in Fig 1) and are recessed into the floor and roof of the wind-tunnel working section. These four rails are used to carry the two fore and aft traverse rails (X axis in Fig 1) which are aligned with the wind-tunnel freestream direction. The two vertical traverse rails (Z axis in Fig 1) are supported between the fore and aft rails. Apart from minimising the length of support strut in the airflow this arrangement also minimises the changes necessary (variation of the length of the Z axis struts) when the system is moved between the 13 × 9 ft and No.2 11ft low-speed tunnels at RAE[1].

On the vertical traverse rails is mounted a unit for carrying any desired flow-measurement device that can be attached to a forward-facing vertical surface. The control unit for driving this Cartesian system is based on the type of device used for driving numerically-controlled machine tools, the manufacturer of the unit, PKS Ltd, being a specialist in this field. The unit is basically manually operated but includes facilities such as indexing. Further details of the design and method of operation of the Cartesian traverse system are given in section 2.

A five-tube, pressure-measurement probe is attached to a moveable quadrant which in turn can be rotated about the X axis by a roll unit (Fig 3). The probe can thus be aligned with the local flow direction within a conical region centred on the freestream direction. The use of this type of double angular motion, rather than the more conventional pitch and yaw arrangement[2], reduces the magnitude of interference effects but has important repercussions on the calibration and data analysis methods. The quadrant and roll unit, which was also designed and manufactured by TEM Ltd, is described in detail in section 3.

078

Voltages related to the pressures on the tubes of the probe (Figs 4 and 5) are used in a closed-loop servomechanism[3] to drive the quadrant and roll motions until the probe is aligned with the local flow direction. The quadrant and roll motions may also be controlled directly by hand-switches. A detailed description of this system is given in section 4.

A computer marketed by DEC Ltd*, the PDP-11, is used to provide control, data acquisition and data processing facilities. This machine, which has a 16-bit word length, is used with 16K of core storage, twin exchangeable-disc units and several other standard peripheral devices (a block diagram of the complete system is shown in Fig 6). Digital and analogue interfaces are used to link the computer to the control units for the Cartesian traverse system, the quadrant and roll system, and the pressure measurement system. These interfaces, which allow automatic operation of the complete system, were designed and built at RAE, largely using logic modules manufactured by DEC. The interfaces are described in section 5. The final suite of software for the control of the traverse, for test monitoring, data acquisition, data processing and general data handling is described briefly in section 6. Detailed descriptions of the individual programs are given elsewhere[6]. Software for specific applications such as the determination of the components of drag[4] and tailplane environment studies[5] are not covered in the present Report.

The procedure for a typical wind-tunnel test using the wake-traverse system is described in section 7, together with details of the preparatory calibrations and the corrections to be applied to the flow details measured.

1.3 Chronology and resources

The principal events and activities in the development of the traverse system are listed in Table 1. Although the work covered a period of 7 years the bulk of the effort was expended in the last 4 years. In this sequence of events some important factors should be noted:

(1) The redefinition of the requirements in 1972 (as explained in section 1.1 above) resulted in a considerably more powerful and complex system.

(2) Apart from the elements of the hardware which entailed considerable development work (the control system for the quadrant and roll motions, and the interfacing units), all other parts of the hardware were designed and manufactured by specialist contractors (TEM Ltd, PKS Ltd, and DEC Ltd).

078

* DEC and PDP are registered trademarks of Digital Equipment Corporation.

(3) All the software development was done at RAE Farnborough. The final system consists of over 170 program modules containing 13000 lines of coding (55% in FORTRAN) and took $4\frac{1}{2}$ man years to complete.

(4) In view of the exploratory nature of the design of the automatic control for the traverse system it was essential to maintain a close liaison between those engaged in the development of the hardware and software for this purpose. Thus the interfaces and the first prototype of the control software were developed by one man. In subsequent work steps were taken to ensure that other programmers were thoroughly familiar with the hardware.

(5) The use of a first prototype for the control software, rather than aiming for a 'final' system from the start, without any trials of an intermediate standard of software in actual measurements, proved extremely valuable. The lessons learnt with the prototype software (in the coding of the real-time control functions and the identification of requirements for additional modes of operation of the traverse system) enabled a 'production' version of the program to be developed rapidly. The prototype system was used concurrently to make the first comprehensive wake surveys[4] with the system.

(6) The end product of this work represents the achievement of a team including specialists from both RAE and industry. Details of the individuals concerned and their particular contributions are given in the acknowledgments section.

2 THE CARTESIAN TRAVERSE SYSTEM

2.1 Mechanical design

The X-Y-Z Cartesian axis traverse (Fig 1) consists of a number of rails on which are mounted toothed racks. A tractor unit runs on each rail and is propelled by a stepper motor* coupled to the rack via a gear box and drive pinion. The Y-axis tractor units and rails are recessed in the floor and ceiling of the wind-tunnel working section. The X-axis tractor units are mounted along wind, downstream of the rear vertical strut. The Z-axis tractor unit is contained in the probe carrier unit, between the two vertical struts, and drives two pinions,

* A stepper motor consists of a multi-pole, permanent magnet armature with a number of separate field windings positioned at equal intervals circumferentially. This type of motor is driven by a sequence of switching signals that apply a voltage to each winding for a limited period. The order of the signals determines the direction of rotation of the armature and the frequency of the signals determines the speed of rotation. A control unit is used to generate these power signals from a pulse train and a direction signal, both supplied at logic voltage level.

one at each end of the motor, which mesh with toothed racks on the downstream surfaces of the vertical struts. To minimise the size of the tractor units the toothed rack provides both the means of driving along an axis and the location normal to the axis, in conjunction with a recirculating-ball bearing running in 'V' grooves on each side of the rail. Hence to obtain repeatable positioning of the traverse it is necessary to adjust the meshing of the rack and pinion on each tractor unit to remove any backlash. The pitch of the teeth on the rack is 4 mm and the reduction gear train attached to the drive motors was chosen so that this movement corresponds to one motor revolution (200 discrete steps for the particular motor used). This resulted in a positional resolution on each axis of 0.02 mm.

Any differential expansion of the tunnel working section and the traverse structure, due to changes in the ambient temperature, or to any slight error in the installation of the Y rails (e.g. non-parallelism) is accommodated by fixing the X rails only at the rear Y rails. The junctions at the front Y rails allow a limited amount of sliding in the X direction (all four joints being free to rotate through a small angle in the X-Y plane). The Z-axis struts are free to slide vertically and rotate over a limited angle at their junction with the upper X rail. The probe-carrier unit containing the Z-axis drive splits into fore and aft sections (one associated with each strut) so that the inclination of the carrier may be adjusted during assembly by changing the position of the meshing of the stepper motor drive gear with the reduction gear train.

The tractor units carrying the X rails protrude through slots in the wind-tunnel working section and these slots are sealed by rolled spring steel strips, running in guides, that are pulled out by the tractor units and are self retracting. The electrical signals for the traverse drive, control and the sensors associated with the probe are led to the Y-axis tractor units via brushes and tracks on the X and Z axes (for the motor drive and some digital control signals) or continuous cables, mounted on a 'lazy tongs' structure connected to the probe carrier (for the remaining digital control signals). The pneumatic lines from the probe to the pressure transducers outside the tunnel are also routed via the latter structure. From the Y-axis tractor units a system of moving pulleys with counterweights, mounted outside the wind tunnel is used to lead the cables out to the control and monitoring equipment.

When the complete traverse gear was first installed in the No.2 11½ft wind tunnel some measurements of the deviations from linear Cartesian motions were made to confirm that these were negligible for practical purposes. For example,

traversing through the complete vertical traverse range resulted in a maximum horizontal deviation of ±0.05 mm, measured at the probe mounting face.

2.2 Control system

The basic manual control system for driving the stepper motors on the X, Y and Z axes was designed and built by PKS Designs Ltd[7]. The drive along each axis is controlled by a separate unit. For each control function requested a train of logic voltage-level pulses is produced which is then processed and amplified to give the appropriate power switching signals to the windings of the individual stepper motors. The pulses are counted and the current position displayed on bi-directional decimal counters for each axis, *ie* basically an open loop control. All three axes may be traversed simultaneously and five modes of drive are available:

(1) JOG, a single step movement at slow speed;

(2) SLOW, a continuous movement at slow speed (4 mm/s or pulses at 200 Hz);

(3) RUN, a high speed movement that continues while the control is depressed (40 mm/s or pulses at 2 kHz);

(4) INDEX, a high speed movement over a preset number of steps, and

(5) RETURN TO DATUM, a high speed movement to achieve a zero reading on the position display (*ie* an index equal to minus the current counter value).

The slow and high speeds of the motors, and the duration of the acceleration and deceleration ramps between the slow and high speeds, can be adjusted to avoid speeds at which shaft or motor resonances occur, and also to ensure that sufficient torque is available to cope with the anticipated aerodynamic and inertia loads. At the high speed chosen (2 kHz) the motor torque is approximately equal to the static torque, while the peak torque occurs at a pulse frequency of approximately 1 kHz.

Although this torque is sufficient to handle the loads normally encountered, it is necessary to make provision for the complete failure or stalling of a motor. In this eventuality the basic control system would continue to drive the remaining motors as there is no mechanical interconnection between the motors on a particular axis. Thus it was necessary to provide some closed-loop control in the system to ensure synchronous movement of the motors operating on each axis. Accordingly a disc with a small hole near its periphery is mounted on the end of

078

each motor shaft, with a light source and photocell positioned on opposite sides, so that a signal is generated by the photocell once per revolution of the rotor shaft. Once the X, Y and Z axis had been accurately aligned in the wind tunnel, the discs were rotated on the motor shafts until the once-per-revolution signals occurred simultaneously, and were then dowelled to the shafts. The datum position for each axis may be regained very easily by driving the tractor units to within one motor shaft revolution (4 mm) of the datum by visual observation and then using the once-per-revolution indicators to drive to the correct step (1/200 of a revolution ≡ 0.02 mm) in that one revolution of the shaft.

Control logic was designed to check the synchronisation of the indicators automatically during low and high speed traverses, so that if any asynchronism is detected on an axis the drive to all motors on that axis is stopped within one revolution. This system has proved very reliable in preventing any catastrophic failure of the X, Y and Z traverse structure when abnormally high loads have been encountered. During the acceleration and deceleration phases of high-speed traverses spurious indications of asynchronism can occasionally occur (presumably because of differential twisting of the motor shafts) so the control logic, and the associated software, incorporate means of identifying any spurious errors before indicating failure of the traverse drive mechanism.

Motion on any of the three axes may be terminated by signals from micro switches positioned at each end of seven of the eight traverse rails (the probe-carrier unit cannot pitch on the two Z rails), and also by signals generated by comparators operating on the current value in the position counter and upper and lower limiting values set on thumbwheel switches for each axis. Traverse motion may thus be restricted to a small part of the wind-tunnel working section if, for example, there is any danger of fouling a model.

To extend the position monitoring capability of the system (a requirement listed in section 1.1) provision has also been made to allow the X, Y and Z tractor units to be set at their datum positions without any need for direct observations (e.g. during a test run). An absolute position is defined on each axis by means of a shutter, fixed on a traverse rail, and a moveable light source and photocell, mounted on the corresponding tractor unit, that pass either side of the shutter.

3 THE QUADRANT AND ROLL PROBE UNIT

3.1 Mechanical design

The quadrant and roll probe unit is attached to the vertical face on the probe carrier of the Cartesian traverse system (Fig 1) when it is desired to

078

measure local velocity vectors. The principal components of the unit are sketched and annotated in detail in Fig 3. The roll unit rotates at a maximum speed greater than 14°/s, over a range of 410°, in steps of 0.036^{o}. Because of the direct gearing, backlash is negligible and the precision of movement is within one step. The quadrant moves through the guide block at a maximum speed greater than 8°/s, over a range of 62°, in steps of 0.01^{o}. The tension of the wire wound round the quadrant drive capstan and attached to the ends of the quadrant, and the position of the guide rollers for the quadrant, may be adjusted to remove backlash in the motion. A maximum deviation of 0.08^{o} of the quadrant from the nominal angle demanded has been measured over a 60° movement of the quadrant.

The pressure measurement probe consists of five 1mm hypodermic tubes and is of similar design to the yawmeter used in the work reported in Ref 2. To reduce the magnitude of alignment errors in shear flows the smallest possible tube size is required for the probe. Practical problems experienced[2] with probes fabricated from 0.5mm tubes led to the adoption of 1mm tubes for the current work. A centre tube having a square-cut end is surrounded by two pairs of tubes, having their ends chamfered at 60°, in a cruciform arrangement. The plane containing the centre lines of one pair of these tubes (the quadrant tubes) is aligned with the quadrant, while the corresponding plane of the other pair (the roll tubes) is normal to the quadrant. The centre of the tip of the central tube lies at the virtual centre defined by the quadrant (radius 254 mm). The probe tip movement when the quadrant and probe are rolled was measured for several quadrant positions at both probe-mounting positions and a maximum deviation of 0.25 mm from the virtual centre position obtained.

In addition to the five tubes for measuring the pressures at the virtual centre of the quadrant, provision is made to measure the static pressure on the probe using four ganged holes round the circumference of the probe stem, 46 mm from the probe tip. As this static pressure will differ from the value at the probe tip it is only used for control purposes (see section 4).

The six pressure measurement points are connected to pressure transducers, mounted outside the wind tunnel, by steel hypodermic and flexible plastic tubing within the quadrant and roll units, and by plastic tubing on the Cartesian traverse system.

Observations of the probe stem with a telescope, under static and wind-loaded conditions (75 m/s flow speed with the probe at 30° to the incident stream), showed no evidence of deflection within the accuracy of angular measurement

078

($\pm 0.05^{o}$). The probe tip is 1.12 m forward of the front Z-axis strut and this, combined with the near-axisymmetric form of the quadrant and roll unit, serve to keep interference effects on the flow to be examined to a minimum.

3.2 Control system

The control system for the stepper motors on the quadrant and roll motions is similar to that used on the XYZ traverse (section 2.2 above but without indexing facilities) with the addition of a voltage to frequency converter on each unit. For an applied dc voltage this device produces a train of pulses having a frequency proportional to the original voltage and a direction signal for the drive that is dependent on the sign of the original dc voltage (Fig 5). For manual control, facilities are provided to run the motors at low or high speed by using the appropriate switch to apply one of two fixed dc voltages to the voltage to frequency converters. For servocontrol (see section 4), a varying voltage is used to generate pulses up to an upper frequency limit set by the torque/speed characteristics of the quadrant and roll motors.

The pulses generated are counted and the current quadrant and roll angles are shown on bi-directional decimal counter displays. Quadrant and roll motions may be terminated both by signals from micro switches positioned to detect the physical motion limits, and also by signals generated by comparators operating on the current value in the position counters and on upper and lower limiting values set on thumbwheel switches for the two motions. As with the Cartesian traverse system the latter facility may be used to prevent the equipment fouling a model. Optical isolators are used in the control system to prevent the switched power voltages producing interference with the logic voltage signals.

The brake fitted to the quadrant drive (see Fig 3) prevents the quadrant falling through the guide block when the drive power is switched off (the large reduction gear ratio on roll makes this unnecessary for roll). A solenoid is energised when the quadrant motor drive supply is switched on and this holds the brake off while the quadrant is being driven.

Provision is made for the automatic indication of the datum position on the quadrant and roll motions. A light source and photocell are used in conjunction with small holes in moving parts of the quadrant and roll units. Tests of these systems have shown that while the roll unit could be repeatedly positioned to within one motor step ($\pm 0.036^{o}$), it was not possible to do this with the quadrant. In the current test procedure (see section 7) the roll unit is set up by means of an inclinometer, and the quadrant by measuring the flow vector at one

point using the two possible roll positions (approximately 180° apart) at which the probe may be aligned with the flow vector. In view of the reliability of the roll drive only small savings in time are likely to result from the use of the automatic datum indication on roll. There is less need for the quadrant datum check as the current setting-up procedure provides a useful check on several aspects of the system.

4 PRESSURE MEASUREMENT AND THE PROBE-CONTROL SERVOMECHANISMS

4.1 Pressure measurement

The method by which the six pressures on the probe for measuring velocity vectors are connected to pressure transducers is shown diagrammatically in Fig 4. Separate transducers are used for each measurement point, rather than a single multiplexed transducer, for three reasons arising out of the requirements stated in section 1.1:

(1) To increase the rate at which measurements may be made by allowing the pressures to be read simultaneously rather than serially.

(2) To remove any possibility of interaction between the measurement of pressures.

(3) To enable the transducer type and range to be matched to the particular measurement requirement.

Transducers are required for two functions:

(1) To provide the control signals for the quadrant and roll servomechanisms.

(2) To enable the total and static pressures at the tip of the probe to be measured when the probe is aligned with the local flow direction.

Three MacDonald transducers[8] are used to provide the control signals. These transducers are of the capacitance type with a plastic diaphragm. They can be constructed to produce a very high gain with low hysteresis, good zero stability, and the ability to withstand considerable over-ranging, all qualities which make them very suitable for use in the servocontrol loops. Their deficiencies, a nonlinear response and a long-term change of gain (over a period of weeks), are not important in this application. Two of these transducers (with a range of approximately ± 250 N/m^2) are used to measure the pressure difference between the pairs of side tubes on the probe parallel and normal to the plane of the quadrant. The third transducer (with a range of ± 3.5 kN/m^2) is used to provide a voltage related to the local dynamic pressure at the probe. No

078

detailed pressure calibrations have been made for these three transducers as they are calibrated as part of the control system (*ie* volts versus angular error on quadrant and roll as in Fig 14). The use of these transducers is described in section 4.2.

The total and static pressures at the tip of the probe are derived from measurements of the pressures on each of the five tubes of the probe relative to one of the wind-tunnel reference pressures, M and N (maximum and nozzle sections), defined in Fig 4. The total pressure is measured relative to M and the side-tube pressures relative to N, as this arrangement gives the smallest pressure differences. The M-N pressure difference (generally by far the largest pressure to be measured) is measured with a precision pressure gauge made by Texas Instruments. The five tip pressures are measured with transducers having a range of ± 3.5 kN/m^2. These transducers have a stable, linear calibration, low hysteresis, zero drift and noise, and a reasonable tolerance to over-ranging (×5), but a moderate sensitivity to temperature variations. As it is possible under exceptional circumstances (*eg* when the probe is positioned in the core of a strong vortex) to obtain total pressures outside the range of this transducer, a second transducer of $+17.5$ kN/m^2 range is connected in parallel with the transducer used to measure the total head pressure. This transducer has some hysteresis in its response to applied pressure but, as it is only used over a small part of its range, and for very few measurements of the flow vector, this deficiency will not have a significant effect on the overall accuracy of measurement of a flow field. The transducers have been calibrated over their operational ranges, and the calibration curves have been approximated by a set of least-squares-fit quintics with a maximum deviation of 8 N/m^2 or 0.2% of full scale. As the pressures measured by these transducers are generally small the overall accuracy of pressure measurement (static or total head), for the manual system, approaches the accuracy of the gauge used to measure the tunnel reference pressure difference (which is significantly better than 0.1% of the wind-tunnel dynamic pressure).

All eight transducers are mounted outside the wind tunnel with the pressure connections to the probe having a typical length of 10 m. Provision had been made to mount the transducers on the rear of the probe carrier but this facility is not used, mainly because of a desire to keep the transducers in a more stable environment (free from vibration and changes of temperature). In consequence the response of the transducers is typically 8 s to reach 0.995 of the applied pressure. To provide a control system with a rapid response to changing flow conditions it is necessary to process the voltages produced by the control

078

transducers with a phase-advance network (see section 4.2 below). However the long response time of these transducers makes it possible to tune the servocontrol system more readily, because of the wide range of response available at the output of the phase advance network, and also acts as a low-pass filter on the applied pressure. Thus any fluctuations in the flow down to frequencies of about 1 Hz are effectively averaged. As a result the control systems are more stable and the task of measuring accurate mean values for the pressures is made correspondingly easier. The response time of the transducers does set an ultimate limit on the rate of data acquisition but with the current system this only represents about 25% of the time for each measurement and other control activities take place during this settling period.

During the initial measurements of flow vectors a purely manual system was used for control and data acquisition (section 5). The voltages generated by the pressure transducers were displayed on a switched digital voltmeter and recorded by hand. Since the equipment has been interfaced to the computer the voltages have been measured with an analogue to digital converter. Measurements of a fixed voltage for a number of sample sizes showed that a sample size of 100 measurements is necessary to achieve a measurement accuracy of 0.1% of the applied voltage. Furthermore it was found that in order to avoid spurious voltage measurement caused by beating of the sampling frequency with the mains-frequency transducer noise (aliasing), a random time delay is required between successive measurements (up to 5 ms; a quarter of a cycle at 50 Hz). A ripple scan technique is used so that a single measurement is made for all of the pressures before each time delay, and the procedure repeated until a 100 scans have been made (which takes approximately 0.35 s by this method).

4.2 The probe-control servomechanisms

The aim in designing the control system for the quadrant and roll units was to provide a closed-loop servomechanism that could align the five-tube probe with the local velocity vector throughout a viscous wake, of the type generated by an aircraft model, without the need for constant adjustment of gain and response. The control system developed is based on the work of East[3] and a block diagram of the quadrant section of it is shown in Fig 5. Although only the quadrant section is described below, the roll section is identical apart from the different input and output signals.

078

For small deviations of the probe from the local velocity direction (up to about $\pm 3^{o}$) a pressure, and hence a voltage ($V_{\Delta Q}$ for the quadrant), proportional to the angular error is produced at the highly sensitive pressure transducer

connected to the quadrant pair of side tubes on the probe. Larger deviations of the probe from the local velocity direction cause saturation of the preamplifier and result in a constant voltage output of the appropriate sign. The error voltage is displayed on a meter, to facilitate manual control, and is also output to the analogue to digital converter on the computer, to allow direct monitoring and control by the computer. A set of analogue limits are also provided to generate signals for the operator, and the computer, when the error voltage comes within a specified tolerance band about zero (*ie* to indicate when the probe is aligned with the flow direction).

The error voltage is then processed by a phase advance (or transitonal lead) network to improve the effective response of the servo loop. The output voltage from this network is used as the numerator input for a division module, the purpose of which is to produce a non-dimensionalised output, relative to the local dynamic pressure, so that the gain of the servo loop is unaffected by the passage of the probe through the viscous parts of the wake being traversed. The transducer connected between the central tube and the static holes on the stem of the probe produces a voltage (V_q) proportional to the local dynamic pressure. This voltage is displayed, output to the computer, and is used as the denominator input for the division module for both the quadrant and roll control channels.

The output voltage from the division module may be read by the computer, for use in direct computer control of the quadrant (this is described in more detail in sections 5.3 and 6.3.2). Alternatively under servocontrol operation the voltage is fed to the voltage to frequency converter that forms part of the quadrant control system (described in section 3.2).

The gain of the control loop may be changed by varying the gain of the preamplifiers for either the error volts, $V_{\Delta Q}$, or the dynamic pressure volts, V_q, although the latter will change the gain of both control loops. The response of the system may be changed by varying the value of a resistive component in the phase-advance network. The phase-advance network was calibrated by applying a step change of pressure to the pairs of side tubes on the probe and recording the variation of the voltages $V_{\Delta Q}$ and $V_{\Delta Q}/V_q$ with time using an ultra-violet recorder, for a range of values of resistance in the network. For most purposes a response having one overshoot, relative to the final steady voltage level, produced the best servo system performance with the quadrant and roll units aligning the probe with the local flow direction (within $\pm 0.05^{\circ}$) very rapidly (typically within 10 s).

078

When a greater accuracy of alignment than this is required (for example in flow investigations to determine the components of drag) either manual intervention is required to decide the best alignment within the resolution of the system (0.01^{o} on the quadrant angle), or a control program for the quadrant and roll units, operating in the computer, may be used for the same purpose (the various control options are described in section 6.3).

Unlike the servocontrol system used by Maskell[2] for changing the pitch and yaw angles of a five tube probe, there is an interaction between the two angular motions in the present system. Theoretically there is no preferred angular position in roll when the airflow is parallel to the roll axis, but as the pressure error from the pair of roll tubes is proportional to the angle of the quadrant to the roll axis (*ie* no error pressure at zero quadrant angle), it has been found in practice that alignment of the probe with the flow is rapidly achieved except for very small quadrant angles. As very small angles of pitch and yaw occur simultaneously only in the empty wind-tunnel flow, or at a very few places in a typical wing wake, this behaviour has placed no limitations on the use of the servomechanism. There has been no need to use the facilities provided for detecting when the quadrant angle comes near to zero. The variation of the pressure error from the pair of roll tubes with quadrant angle has also not been found to be important operationally as the nonlinear form of the control loop response assumes that the maximum pulse frequency is used for the roll drive for any roll position significantly different from that of the flow vector.

From the symmetry of the quadrant and roll drive units (Fig 3) it is apparent that there are two combinations of quadrant and roll angular positions (within one revolution in roll) at which the probe may be aligned with the local flow direction. However, with the control loop in the form shown in Fig 5, only one of these produces a stable state of alignment of the probe with the flow, as at the other position any small error in the quadrant angle will tend to cause the probe to be driven further away from alignment. This unstable alignment position is utilised in the calibration and setting-up procedure for the quadrant (section 7) and can be achieved automatically by using the computer to control the angular motions (see section 6.2).

5 INTERFACING OF THE MANUAL CONTROL SYSTEMS TO THE COMPUTER

5.1 General

A feature of the architecture of the PDP-11 range of computers is the bus for input and output operations to which all peripherals are attached. This is

078

combined with an addressing structure that allows any device connected to the bus to be directly referenced, with the same instruction set, as though it is core memory. Fig 6 shows a schematic diagram of the complete wake-traverse system with the standard DEC peripherals and the special interfaces connected to the computer input and output bus.

The form of the interfaces required for the Cartesian traverse controller, the quadrant and roll unit, the analogue inputs and the analogue graph plotter is constrained by the need to be able to respond to asynchronous stimuli from the control equipment and the operator. This need could have been met by software; the program controlling the equipment could have been designed to test device status periodically and to act accordingly. However the computer resources (the central processor and the arithmetic units in particular) are much more efficiently used by designing interfaces that convert the external stimuli into signals that can interrupt* the current program functioning in the computer, so this approach is adopted wherever possible for the wake traverse system.

The standard DEC modules used in the interface equipment are the DR11A modules for digital inputs and outputs, the AD02 system for analogue to digital conversion and the BA614 modules for digital to analogue conversion. To reduce interference from external sources, the logic signals between the manual control equipment and the interface equipment (which is installed in the same racks as the computer equipment) are raised to 15 V from the 5 V logic level used elsewhere. A common, low-resistance, earth is used for the analogue signals at the pressure transducers, the analogue sections of the quadrant and roll servo systems, and the analogue to digital conversion system, in order to prevent any voltage offsets between these components.

5.2 The interface for the Cartesian traverse control system

A schematic diagram of the interface is shown in Fig 7. The six register names shown on the left-hand side of this figure may be directly referenced by the computer contral processor. Each register consists of a 16 bit word with two of the registers being used for outputs from the computer and the remainder for

---

* In the PDP-11 this is achieved by having hardware to vector the interrupt signal. Thus when the interrupt signal is received by the computer, the central processor stores the status of the current program in a last-in, first-out queue (called 'the stack') and transfers control to a program the first address of which is stored in a fixed location in store associated with the interrupting device (the vector address). When execution of this program is complete, control is transferred back to the program that was interrupted by retrieving the appropriate status information from the stack.

inputs to the computer. The functions of the individual bits are shown on the figure and a list of the control modes available (coded in bits 3 to 6 of TCBR2) is given in Table 2.

To drive the Cartesian traverse in a particular mode the appropriate bit pattern is entered into the mode bits, together with the axis on which the action is required (bits 0 to 2 of TGBR2), and the data. The latter are only required for an index or for setting a new datum position in the bi-directional counter on the control unit for the particular axis. The act of entering or clearing bits in the TGBR2 register generates a pulse (the new-data-ready pulse) which in turn generates a pulse for the command corresponding to the current bit pattern and transmits the required data signal levels from the interface to the Cartesian-traverse control unit. The command pulse is approximately 5 ms long and once it has been received by the traverse control unit, a new command (*eg* for a different axis) may be issued by the computer.

When a requested action has been completed, or in response to a control mode that requires an input, signals are transmitted to the computer input registers (TGTR1, TGTR2, TGSR1 and TGSR2). The first pair of these hold data that may be interrogated by a computer program. However if a quick response to a signal is required (for example at the completion of an index on an axis) the second pair may be used to provide an interrupt in the current program as described in section 5.1. During the execution of the traverse control program, the occurrence of these interrupts due to external events may be controlled by setting or clearing an enable bit associated with each interrupt signal. By making use of this facility the overall control program for a traverse may be simplified by allowing only the device currently being controlled to generate interrupts. Because there are only four interrupt inputs available, the input signals have been grouped as shown in Fig 7. Thus to find the detailed cause of an error, for example, it is necessary to examine the possible sources of trouble as indicated by bits in TGTR2.

Details of the electronic logic necessary to output the commands in a pulse form, to input the data and to clear the interrupt signal lines in readiness for a response to a new command, are not shown in Fig 7 for the sake of clarity. The circuitry is fully described in a note by Purkiss[9].

Both the input and output data are in binary-coded decimal form with a separate bit for the sign of the data. All operations in the associated computer programs are done in FORTRAN real variable format. As 24 bits are used to

represent the magnitude of the number in this format, which consists of two 16 bit words containing sign, exponent and magnitude bits, there is sufficient accuracy to carry the largest data required for the Cartesian traverse control. Special conversion programs were written for the translations between the real variable and binary-coded decimal formats.

The motor synchronisation checking procedure described in section 2.2 can be initiated and monitored from a computer program using the registers TGBR2, TGTR2 and TGSR1. If a synchronisation error signal is generated during any movement on a traverse axis an interrupt occurs at TGSR1 bit 7 and the motion on the axis is automatically terminated. The source of the error is ascertained by examination of bits 0, 2 and 4 of TGTR2. As the drive motors on the axis will have come to rest away from the synchronisation checking position (because of the distance required to decelerate), the motors are driven at low speed until one indicator light signal (at least) is received, using control mode 2 in bits 3 to 6 of TGBR2 with the appropriate axis bit set. If all four indicator light signals are received simultaneously (*ie* the error is spurious) this is indicated in bits 1, 3 and 5 of TGTR2 and a new index command may be issued to complete the remaining part of the movement originally requested. If any signals are missing, control of the traverse is transferred back to the operator for the fault to be rectified.

5.3 The interface for the quadrant and roll control unit

A schematic diagram of the interface is shown in Fig 8. As in the interface for the Cartesian traverse system six registers are used; two for output (QRBR1 and QRBR2), and four for input (QRTR1, QRTR2, QRSR1 and QRSR2).

The output register QRBR1 is used for setting and clearing a number of latches on the signals which may be transmitted to the interface from the quadrant and roll control unit. Because of the large number of possible input signals these are combined into four groups for the purpose of generating interrupt signals and the latches provide a means of selecting which inputs in each group may be allowed to enter the QRTR2 register and cause an interrupt.

The output register QRBR2 contains all the control modes for quadrant and roll. Individual bits are available for all the modes for both quadrant and roll motions because there is no numerical data to be output. Means for controlling the motors on the quadrant and roll, corresponding to the manual and servomechanism methods described above (sections 3.2 and 4.2 respectively), via the computer, are incorporated in the interface. Firstly bits 8 and 9 of QRBR2 may

078

be used to start and stop the operation of the servomechanism on the quadrant and roll drives. This mode of operation is used to obtain a relatively coarse alignment (typically $\pm 0.05^{o}$) of the probe with the flow direction. It may be used while the Cartesian traverse system is in operation and requires no further involvement of the computer program controlling the quadrant and roll drives until all the Cartesian motions are complete. The second method of drive (corresponding to direct manual drive) is used for the final alignment of the probe with the local flow direction. In this method the servomechanism drive is inhibited and pulses from the computer are supplied directly to the unit that generates the sequence of switched power voltages that drives the motor. This method of drive is indicated in Fig 5. Variable length square pulses are generated by a programmable clock (a standard DEC peripheral) and output using bits 4 and 5 of QRBR2 (for quadrant and roll respectively). The corresponding directions of drive are output from bits 10 and 11. A computer program is used to form pulse trains of the required number of steps for motion at low speed and high speed (with ramps for acceleration and deceleration in the latter case).

Three other control functions for quadrant and roll are available in QRBR2, these are, read the bi-directional counters, clear the counters and set the counters to a number entered on thumbwheel switches on the control units. The new-data-ready pulse, associated with each reference by the computer to the QRBR2 register, is used to generate a pulse for the last two commands; the remainder of the control signals are transmitted as voltage levels.

The input register QRTR1 contains the magnitude of the position data when requested as described above. Four binary-coded decimal digits provide sufficient magnitude for the range of the quadrant and roll motions available; the sign being stored in bit 15 of QRTR2. The conversion program referred to in section 5.2 above is used to convert the binary-coded decimal data to a FORTRAN real-variable format.

Bits 0 to 13 of QRTR2 show the current state of the quadrant and roll manual control unit, subject to the corresponding latches being open. As noted above the input signals are divided into four groups, each with its own interrupt line in QRSR1 or QRSR2. Group A (bits 0 to 3 of QRTR2) are error conditons and show when the upper or lower motion limits (physical or as set in the thumbwheel switch registers) have been reached. Group B (bits 4 to 6) indicate certain special quadrant and roll positions (the drive datums, described in section 3.2, and the facility to detect when the quadrant angle approaches zero, mentioned in section 4.2). Group C (bits 7 to 9) are associated with probe alignment. The

078

quadrant and roll ready signals (bits 7 and 8 respectively) are set when the magnitude of the corresponding error voltage (either $V_{\Delta Q}$ or $V_{\Delta R}$ in Fig 5) falls below a predetermined level, and thus provide an indication of when the probe is approximately aligned with the flow. The associated interrupt signal is used to transfer control to a program to make the fine angular adjustments necessary to get the best alignment of the probe with the flow. Under some extreme flow conditions (*eg* highly turbulent flows) it is not possible to obtain convergence with this automatic probe control procedure and manual intervention is necessary (for this purpose bit 9 of QRTR2 is connected to a button). Group D (bits 10 to 13) show the current setting of the computer/manual switches on the quadrant and roll control units.

As with the interface for the Cartesian traverse control system, no attempt has been made to show in Fig 8 the details of the electronic circuitry to provide the output pulses and voltage levels, and accept the input signals, but this information is available elsewhere[9].

5.4 The interface for analogue inputs

A schematic diagram for the interface is shown in Fig 9. As standard DEC modules are used for the interface, and there is no need for any additional electronic logic, it was only necessary to connect the required signal lines to the multiplexer. The names of the signals and the associated multiplexer channel numbers are given in Table 3.

The register ADCS is used to control the conversion of voltages from analogue to digital form. The channel for measurement is selected by setting the corresponding binary address in bits 8 to 14 of ADCS, and the gain of the amplifier in the voltage conversion module is selected by setting bits 3 and 4 of ADCS. The conversion is started by either of these operations or, if the channel and gain are to remain fixed, by setting bit 0 of ADCS. When the conversion is complete either bit 7 or, if an error has occurred during the conversion, bit 15 of ADCS is set. Bit 6 of ADCS may be used to allow either of these signals to generate an interrupt signal at the computer. As in the other special peripherals, this interrupt facility is made use of in the automatic control of the traverse system, with the interrupt generated at the end of a conversion being used to call the computer program to initiate the next scan. The digital data resulting from a conversion is stored in the computer input register ADDB, 11 bits of this being used for the magnitude and the remaining bits all holding the sign. When this data is referenced by the computer the conversion-complete bit in ADCS (bit 7) is

automatically cleared in readiness for the start of the next voltage sample and conversion.

When used for measuring a voltage level from the traverse equipment (the voltages are normally scaled to lie within the ±10 V range of the interface), the switched gain amplifier is set at its lowest gain (×1) for the first scan (*ie* a single sample and conversion to digital form). If the digital data obtained from this conversion is more than 6% below half of the full scale voltage at this gain setting, the gain is doubled and another scan made. This process is repeated until either the maximum gain (×8) is reached, or the voltage magnitude criterion is not met. The particular change-over voltage criterion was chosen to accommodate fluctuations in the input signal without the occurrence of over-ranging on the next higher gain setting. The method of measuring the set of input voltages, a ripple scan technique with a random time delay between scans and a sample size of 100, has been discussed in section 4.1. The time delay is generated by the programmable clock which is set to create an interrupt after a random number of cycles (between 0 and 512) when running at 100 kHz.

5.5 The interface for the analogue plotter

A Bryans X-Y plotter, fitted with a null detector, is used to provide graphical output on A4 size paper for monitoring the data acquired during flow-field investigations. The pen position on this plotter is controlled by two scaleable analogue voltages which generate motion along Cartesian axes. A schematic diagram of the interface designed for the plotter is shown in Fig 10.

The analogue voltages to move the X and Y drives of the plotter are obtained from digital signals using two standard DEC BA614 modules for the digital to analogue conversion. The binary data (up to a maximum magnitude of 12 bits plus sign) is placed in the GPDAX and GPDAY registers for conversion. The pen is allowed to move by setting bit 0 of the control register GPBR. When the point is reached and plotted a point complete signal is transmitted to the computer input register GPSR (bit 7). An interrupt enable (bit 6) can be set which allows the point complete signal to cause an interrupt in the computer program currently being executed. This mode of operation is used for controlling the plotter automatically, the interrupt at the end of one point plot being used to initiate the plotting of the next point.

Two manual controls (buttons) are also provided on the interface to enable the plotting operations to be performed manually for test purposes. The interface circuitry and functioning are described in more detail by Purkiss[9].

078

6 COMPUTER SOFTWARE

6.1 General

Following the choice of a DEC PDP-11 computer, on the basis of the requirements outlined in section 1.1, it became clear that the control functions to be programmed did not represent a very great computing load for the central processor. The times between events are relatively long by computer standards (typically between a millisecond and a few seconds) and the data-transfer rates necessary are low. It was thus possible to design the software assuming the use of an overlay structure for the real-time control program (the program segments being stored on a magnetic disc) and, as a result, to make available more core store on the computer for data handling in the background task.

In considering what software is necessary for the wake-traverse system the form of the data required at various stages in their passage from the wind-tunnel to final results was defined at an early stage, together with a corresponding set of file formats (Table 4). If these files, together with the flow-measurement equipment and the user of the system, are regarded as data sources and sinks, the particular functions for which computer programs are necessary readily become apparent (Fig 11). Further, detailed analysis of these functions allows individual program modules* to be defined, some of which are common to several areas. A system of naming the modules has been adopted[6], consisting of three code letters to indicate the type of module and a three digit serial number, which allows rapid, unambiguous identification of the modules and easy reference to the system documentation.

The data flow sketched in Fig 11 starts with the creation of a file of coordinate data for the grid positions in a traverse. This may be obtained by means of a subsidiary program for complex traverses. Following the testing and calibration of the wake-traverse equipment a calibration file is created. A traverse control program is then used in conjunction with these two files to run the flow-measurement test defined. A file of raw data (counter values and voltages) is created by the control program, and this data is reduced to processed data (ordinates, angles and pressure coefficients) by another program which also uses the calibration data file. The processed data is stored in a file for subsequent analysis as required for the particular test. Various formats of analysis data files may be created from the processed data files before reaching

* A program module typically contains a 100 lines of coding and has only one entry point and one exit point.

the final results of the analysis. To provide essential services for the range of files a general-purpose program allows listing, editing, sorting etc for all the files types referred to above.

Real-time control software requiring operator interaction is only necessary in two areas: testing and calibration of the equipment, and the control of the equipment during flow-field measurements. The software required in the remaining areas is basically independent of the wake-traverse equipment, as it is only concerned with the off-line processing of data held in files.

The exchangeable magnetic-disc cartridge is used as the primary data-storage medium with copies of only a few critical files (program source code, instrumentation calibration data and some raw data) being held on paper tape. Data may thus be stored in a binary format (rather than in formatted ASCII form, which would require coding and decoding for input and output operations) and hence may be rapidly accessed without the loss of accuracy that will occur with a fixed-format ASCII input and output scheme. The formats of the six types of data file identified when considering Fig 11 are defined in terms of FORTRAN real and integer variables (see Table 4). All these files have a title record* which contains the appropriate file type number so that software can be used to check the suitability of a specified file for a given function.

6.2 Software for controlling the wake-traverse equipment

A simplified flow chart for the traverse control program is shown in Fig 12. The program may be split into six main areas:

(1) A dialogue to define the traverse control modes required for a particular test.

(2) Implementation of the single-action control modes (*eg* ZERO, read the transducer voltages before starting the wind tunnel).

(3) Implementation of the multiple-action control modes (*eg* POINT, move to a new point (x, y, z) in the tunnel and measure the flow vector).

(4) Servicing of the Cartesian-traverse control unit.

(5) Servicing of the quadrant and roll probe-control unit

(6) Servicing of the pressure-measurement unit.

078

* A record is the storage capacity necessary to contain a specified collection of data.

When the program is first started an initialisation program module is entered which enables the user to select the output devices he desires from those shown in Fig 6, and to create any new raw data files he requires for the test. After setting the default values for the logical variables that control the path through the program, a program module to input and decode the traverse control modes is entered. The 18 control modes currently available are listed in Table 5. In a flow-measurement test where the user wishes to define his traverse positions as he obtains details of the flow with the equipment, these modes would be input via the console typewriter. However if the basic form of a flow field has been established the specification for a complete test run (consisting of any combination of the modes listed in Table 5, with any necessary data) may be stored in a file and this file used to run the flow-measurement test without participation by the user.

Once a mode has been decoded, and any associated data input, the appropriate program module to execute the mode is entered. Six of the modes (F, G, I, L, P and T in Table 5) entail the use of the Cartesian traverse control unit, in addition to the quadrant and roll control unit, and are hence called multiple-action control modes. These are treated in a different manner from the other, *single action, modes.* Each mode is treated as a separate entity with no overlapping of the output of the results from one mode with the start of the following mode. Thus the execution of the single action modes is relatively simple as the control program must wait until any action on the device concerned is complete. However the control function being followed may be very complex (*eg* the quadrant angle calibration). For clarity only six of the single-action control modes are shown in Fig 12. A separate data acquisition module is used for the three of these modes (Q, R and Z in Table 5) which generate raw data, although the data storage and output modules that follow are also used by the multiple-action control modes. Control is then returned to the mode-processor module to receive the next mode commmand.

For the multiple-action modes the cartesian coordinate data is output to a buffer file, after the calculation of the intermediate points for lines and grids if necessary. Absolute position data (x, y, z) is stored, rather than incremental data, in order to allow the traverse to be restarted from any point within the file. The first set of coordinates is then read into core store, the increments in x, y and z necessary to reach the new point from the current position of the Cartesian traverse are calculated, and the corresponding control signals are transmitted to the Cartesian traverse control unit. The signal lines from this

078

control unit to the computer that indicate completion of the requested action or an error in its execution (see the description of registers TGSR1 and TGSR2 in section 5 and Fig 7) are then placed in a state (termed 'enabled') where they will cause whatever program is being executed in the computer to be interrupted and control transferred to a device servicing program. While the Cartesian traverse axes are being traversed the program modules labelled as 'background program' in Fig 12 are entered successively. These modules form a loop to ensure that the next set of coordinate data is read into core store from the buffer file, that the raw data previously acquired has been written out to a disc file and that the raw data has been output in the manner requested by the user for monitoring the test.

As the motion on each of the Cartesian axes is completed this background program is interrupted and control transferred to the device servicing routine (interrupt 1 in Fig 12) where the movement is checked for errors. No further action is taken until the motion on all three axes is complete, control being returned to the background program until this is so. When the final interrupt 1 has been received the current traverse position is read and stored in core. If the automatic mode of controlling the quadrant and roll motions is being used to align the probe with the local flow direction, program modules to drive the quadrant and roll are called. These modules, which are described in more detail below, use the device control registers QRBR2 (section 5 and Fig 8) to move the quadrant and roll, and ADCS, ADDB (section 5 and Fig 9) to measure the resulting pressures. These actions are all instigated by means of the device register bits (in QRSR1 and ADCS respectively) which allow the background program to be interrupted. The sequence of operations is defined by setting the appropriate enable bits in the same registers from successive control modules. When the probe direction is sufficiently close to the local flow vector, control is transferred to the program module labelled 'interrupt 2' in Fig 12. If manual control of the quadrant and roll drive units has been specified in the mode definition (it is the default mode of operation), this program module is called on the receipt by the computer of an interrupt signal generated by the operator pushing a button.

The servicing program module for the quadrant and roll control unit reads the quadrant and roll position counts and stores these in the same core buffer as the coordinate data previously input. The analogue to digital converter is then set to read the voltages generated by the pressure transducers connected to the probe, using the method described in section 4.1. The device control registers

ADCS and ADDB are again used in an interrupting mode so that while the voltage scans and conversions to digital signals are in progress the background program may continue to be executed.

When the voltage measurements are complete, control is transferred to the pressure-measurement servicing module (interrupt 3 in Fig 12) where the average values of the transducer voltages are calculated. The record of raw data, which has been accumulated by the program modules in the sections labelled interrupt 1, 2 and 3, is transferred to a circular buffer store* in core in readiness for the background program to write it out to the disc auxiliary storage system. The next set of coordinate data is read from the buffer file and the increments required to reach this position from the current point are calculated. The appropriate signals are then sent to the Cartesian traverse control unit and the corresponding interrupt signal lines enabled (*ie* those connected to the program modules labelled 'interrupt 1' in Fig 12). Thereafter control continues as outlined above. Thus a control loop is defined with the background program running almost independently of the traverse control unit servicing modules. When there is no more coordinate data left (*ie* all the required points have been traversed) a logical switch is set by one of the modules in the pressure-measurement servicing program to show that all the demanded actions have been completed, and control is returned to the background program with none of the device-interrupt signal lines enabled.

The device control loop cannot be made completely independent of the background program because of the need to read the next set of coordinate data into core in time for the next traverse point, and the need to store the raw data on disc. As only a limited amount of buffer space is available in core store for these two types of data, circular buffers are used with a check procedure between the control and background program modules to ensure that the data are ready for output or that space is available for input. If either of these conditions is not met a short time delay is introduced (typically about 1 s), using a programmable clock, that allows time for the necessary input or output operations to be completed.

The development of the current traverse-control program from a first prototype system (which had a simple serial operation rather than foreground and background operation) brought an increase in the rate of data acquisition from

---

* A circular buffer store is one in which two pointers, one for input and one for output, are continually cycled through the available storage space as data is added or removed. To ensure that no data is overwritten before it can be removed it is also necessary to know which of the two pointers is leading.

30 points an hour to 60 points an hour, with a maximumum rate of 100 points per hour if the computer-controlled method for aligning the probe with the local flow vector is used. As over 95% of the time per point (when the movements along the Cartesian axes are not very large) is occupied in this control function when using the automatic mode, there remains a strong incentive to improve this control algorithm as the current demands for flow-field investigations[4] require measurements at many thousands of points. In addition, as 50% of the time per point is currently occupied with the fine alignment of the probe with the flow (typically to within $\pm 0.02^{o}$), any relaxation in the standard of accuracy that can be accepted will yield a corresponding increase in the rate of data acquisition. Partly to provide the ability to vary the criterion for probe alignment, a constants control mode (K in Table 5) is incorporated in the traverse control program. (The initial set of calibration data is extracted from the calibration file by the control program.)

Most of the remaining modes listed in Table 5 are self explanatory but three elements of the control software are described in more detail below (sections 6.2.1 to 6.2.3) as they are particularly important.

The current program uses almost the full capacity of core store available (16000 words), this being allocated as follows:

4000 words for the DEC PDP-11 disc operating system,

2000 words for the data buffers for the input and output devices,

6000 words for the permanently resident section of the traverse control program (including those programs common to the overlays), and

4000 words for the overlaid sections of the traverse control program.

The program modules which are overlaid in the last section of core are stored on disc and occupy 25000 words.

Fifty-five per cent of the program modules in the current traverse control program are written in FORTRAN. The FORTRAN code is more easy to follow, particularly as regards logical decisions, than the corresponding modules written in assembler language for the first prototype software. Some additional problems arose however in the development of the current real-time modules. It proved more difficult to locate the source of an error when much of the code being executed was in the Polish mode form (*ie* a succession of subroutine addresses) that is generated by the FORTRAN compiler. This problem was overcome by using

078

individual test programs for the device-servicing modules so that the complete program could be tested in stages and any errors isolated.

6.2.1 The use of the programmable clock

To obtain the control software structure desired (section 1.1 above) a programmable clock is incorporated in the computer system (Fig 6). This device, which may be programmed to produce single or repeated signals, to interrupt whatever program happens to be running in the computer, at time intervals between 10 μs and 10 min, is essential to allow the foreground-background operation of the software. Thus if a device-handling program cannot proceed further without data that is being retrieved by a background program (*eg* x, y, z ordinates) which it has interrupted, the clock may be set running for a short interval by the device handling program and the background program allowed to continue execution until the end of the set time interval, when the ncessary data will be available for the device handling program to continue execution.

By keeping the software structure simple, as described in the section above, only minor conflicts over the use of the central processor occur between the various device-handling programs. These are resolved by using a 'clock-ready' indicator word in the software so that any action following one request for the clock has to be completed before another request may be accepted. Two particular applications of the programmable clock have been referred to above; the driving of the quadrant and roll units from the computer by means of a pulse train (section 5.3) which incorporates acceleration and deceleration ramps that are generated from the clock by software, and the measurement of the average voltages recorded by the pressure transducers (sections 4.1 and 5.4) which involves a set of ripple scans each separated by a random time delay. In both cases, although many hundreds of interrupts are generated by the programmable clock, control always reverts to the execution of the background program between the interrupts. For those applications where the clock is not operated from a device control program (*ie* there is no background program the execution of which has been temporarily suspended), an alternative mode of operation of the clock (and the analogue-to-digital converter) is provided so that any delay takes place in the clock (or ADC) servicing program.

6.2.2 Automatic control of the quadrant and roll units

The main requirements for a control algorithm to drive the quadrant and roll units are to improve upon the accuracy of alignment of the pressure-measurement probe with the local flow vector that can be obtained using the

078

servomechanism described in section 4.2, and to completely automate the balancing operation. In addition it is required to drive the probe to the second null point (an unstable balance condition of the roll servomechanism that is described in section 4.2) for the purpose of calibrating the probe. It is therefore necessary to provide control logic to achieve a coarse alignment of the probe with the flow as the servomechanism cannot be used in the latter case. This facility is also necessary in regions of the flow that are unsteady or have high angular gradients as the servomechanism may not be able to complete a satisfactory initial alignment of the probe (*eg* the servo response may produce oscillations of greater than $\pm 3^{o}$ on the quadrant angle under these conditions).

A simplified flow chart for the final automatic-control algorithm (after development through a number of prototype schemes) is shown in Fig 13. The program modules are written so that the automatic control can be called either from another device handler, with a background program being executed whenever it was necessary to wait for a control action, or as a normal subroutine in which case a simple loop is entered whilst waiting for the required interrupt signal to arrive.

The first part of the control algorithm uses the servomechanism drive for the quadrant and roll motions (the left-hand side of Fig 13). The servomechanism is switched on using the control register QRBR2 (see section 5.2), and the interrupt signal lines to indicate that the probe is approximately balanced (*ie* aligned with the flow) are enabled (QRTR2 and QRSR2 in Fig 8). In case it is not possible to balance the probe in a reasonable time using the servo drive, the programmable clock is set to produce an interrupt after a specified time interval. After this time the servomechanisms are switched off and control transferred to the first stage of the computer-drive balancing method. Currently, 15 s are allowed for the servo drive to operate but only 5 s are normally necessary for both angular axes to be sufficiently near to the balance position to generate the 'ready' interrupt signals. If the unstable combination of quadrant and roll angles is required for the balance point this section of the control program is omitted and control is transferred to the first stage of the direct computer drive for the angular motions.

The second part of the control algorithm uses direct drive of the quadrant and roll units by pulses generated within the computer (described in section 5.3). The control loop of the servomechanism (Fig 5) is effectively extended by supplying analogue inputs to the computer (the out-of-balance pressure signals) and receiving a train of drive pulses from the computer. Three stages of balancing

078

are used to reach the final alignment of the probe with the local flow vector. All three have the same basic sequence; measure the out-of-balance pressure signals and exit if within the desired range, otherwise determine the magnitude and direction of the quadrant and roll motions required to reduce the out-of-balance signal, drive the quadrant and roll, and wait for the pressures to settle before repeating the whole process. The purpose of the first, relatively coarse, balance stage is to drive the probe so that it is within the central section of the transducer calibration (Fig 14). Each axis is driven in a series of fixed angular increments until the sign of the error signal changes. The angular increment is then halved in size, the direction reversed and the process repeated until the error volts are within the desired range (typically ±8 V). For the coarse and medium balance stages the error voltages processed by the phase advance network are monitored so that only a short pause (1 s) is necessary to allow the pressures to settle. The second, medium balance stage brings the probe close to the final balance by calculating quadrant and roll angular corrections from the measured error signals using stored values for the slopes of the calibration curves. (The slopes from the calibrations are used to calculate a balance point, rather than continue the series of angular increments started in the coarse balance, as the former requires far fewer steps to achieve the balance point. Each step takes approximately 1 s to complete.) As can be seen from Fig 14a the quadrant calibration is invariant with roll angle, but the roll calibration (Fig 14b) varies with the quadrant angle. However for quadrant angles below about 15° the relation between the slope of the roll calibration and quadrant angle is practically linear (Fig 14c). For larger quadrant angles assuming a linear relation leads to errors in calculating the angular increment for roll, but the roll calibration is then sufficiently steep to ensure rapid convergence to the balance point. When the error volts have been brought below the required level for this stage (typically ±1 V) control is transferred to the third, fine, balance stage. Here the direct signals from the out-of-balance pressure transducers are monitored and the corresponding calibration constants are used to calculate the quadrant and roll angular movements required, as in the medium balance stage. This is continued until the specified angular accuracy is achieved (currently set at $\pm 0.01^{o}$ or an error signal of ±0.04 V at 75 m/s windspeed). The direct out-of-balance signals are used for this stage, rather than those processed by the phase-advance network, as the noise content in the latter signal is of the same order of magnitude as the accuracy required, and a much greater number of samples would be required to obtain an acceptable mean value.

078

In order that the traverse control program may continue functioning fully automatically when the pressure probe passes through regions where the flow is very unsteady or there are large angular gradients, limits are set on the number of times that each stage of balancing may be executed. If any of these are exceeded the automatic control is terminated for the point and a flag is set to indicate that balancing to the desired accuracy has not been achieved. After acquisition of data at the best balance condition that can be obtained the program proceeds to the next traverse point. The data for the point, and an indication that the desired accuracy has not been met, are listed on the line printer. The operator can thus immediately see those points that may need repeating with manual control of the quadrant and roll units. However in most cases it has not proved possible to improve on the accuracy of balance obtainable automatically. At a typical point in a flow traverse the servo may run for 5 s before meeting the conditions to call the coarse balance. Only one attempt at this stage (1 s) and perhaps three at the medium balance are normally required (3 s). The number of attempts needed for the fine stage is dependent on how turbulent the flow is. About eight attempts (24 s total) may be required for a typical viscous wake.

6.2.3 Protection of data and error handling

To avoid the need for repetition of wind-tunnel programmes it is necessary to provide some protection of the raw data from the effects of electrical interference, mains power failure and various types of computer hardware failure. This may be achieved by dumping raw data onto paper tape as the test proceeds and this output option may be selected by the user during the initialisation of the traverse control program (see Fig 12). As the traverse equipment was used more extensively it became impractical to dump all the data in this manner and a second disc-drive unit was added to the computer hardware (Fig 6) so that data could be stored on exchangeable magnetic discs separately from the computer software. With the present form of the traverse control software it is recognised that raw data, in the circular buffer in core store, that has not been written to a disc file, will be lost in the event of a program failure (*eg* due to electrical interference). However it is essential that data written to the disc file be accessible following a failure. The disc operating system of the DEC PDP-11 provides two forms of disc files; one with adjacent storage blocks, which requires the maximum file size to be specified before use and allows random access to the data, and the other consisting of a chain of linked storage blocks (each block containing the position on the disc of the next storage block of the file)

078

that may be extended as the file is being written. The size and location of the latter, linked, type of file on disc is thus not defined until the output to it has been completed when a map of the disc storage blocks used in the file is written onto the disc. Hence if a program is terminated in the middle of execution it may not be possible to read any of the data output to any linked file created before the fault occurred. A fixed size of file (1000 raw data points) of the first, contiguous, type referred to above is therefore created on the disc holding the traverse control program, and this is always used for storing the raw data generated by the control program. A dump mode is provided in the traverse control program (Table 5) for the user to transfer his data to a linked file (on the other disc drive if desired) for subsequent processing. All the standard wake-traverse files listed in Table 4 are of the linked type as these are easier to handle for most purposes. A warning message is issued to the operator when the contiguous file is nearly full so that the data may be removed and the test may be continued.

Most of the errors that occur in the execution of the traverse control program are associated with the software servicing the control equipment (interrupts 1, 2 and 3 in Fig 12). In order to report any errors on the console typewriter without there being a conflict over the use of this device between the background program and the control-device handling program, a buffer store in core is used to hold a list of error numbers generated during the traverse control. The background program continually checks to see whether any errors have occurred and, if so, prints out the message corresponding to a particular error number. To save space in core store, and allow a fuller explanation of the nature of the error, the error messages are stored in contiguous disc file, the error number being used as a pointer for random access to the file. The current system has 45 different error conditions. Although an error is reported via the background program, action to correct the fault or stop further control functions that might aggravate the condition, is taken by the device handling program. For the more serious error conditions the mode-complete indicator is set 'true' so that all device control operations are stopped and control is returned to the mode input module for the operator to correct the fault before continuing the test.

6.3 Software for test preparation, data reduction and file services

078

This software is all written in FORTRAN apart from some input and output routines that are written in assembler language to extend the facilities provided in the standard software and decrease the execution time for certain critical

operations. A FORTRAN trace procedure, for listing the results of selected lines of code as they are executed, is also written in assembler language.

6.3.1 Test preparation

Much of the preparatory work required before a wind-tunnel test with the wake-traverse equipment does not merit the use of computer-based techniques because either the control task or the data processing requirement for a particular job is trivial.

For some other tasks it is not worth writing special programs but a general purpose program may be used. Thus in calibrating the pressure transducers in the system a general purpose voltage-measurement program (based on the ADC device-handling module incorporated in the traverse control program) is used to read the voltages so that the entire electro-pneumatic system is calibrated. Pressure and voltage data obtained from several cycles through the range of the transducers is then used as the input for a least-squares fit program to approximate the calibration by a quintic, the lowest power polynomial that was found to give a satisfactory fit. The same voltage-measurement program is used for determining the variation of the calibration of the pressure-measurement probe with wind-speed, some typical results for which are discussed in section 7.

A few tasks are sufficiently complex to justify the writing of special software. No attempt is made to describe these in detail here as this is done elsewhere[6], but the principal programs are:

(1) Functional test for the Cartesian traverse system. Each of the control modes described in section 5.2 is activated in turn and the ensuing action checked for correctness. The control modes may be repeated as many times as desired so that any intermittent faults (*eg* on the motor synchronisation circuitry) may be detected.

(2) Functional test for the quadrant and roll system. Each of the control modes described in section 5.3 is tested separately in the same manner as the Cartesian traverse system.

(3) Generation of files of cartesian coordinates for complex traverse grids. The modes in the traverse control program are deliberately limited to producing a grid composed of parallelapipeds as there are too many types of grid that may be required for specific applications (*eg* cylindrical polar and tapered grids) to include them all. Instead it is made easy to use a file of coordinate data to define the traverse grid (traverse control mode F in Table 5). This file (type 6 in Table 4) may be created by a simple FORTRAN program. For any

078

complex traverse of a flow it is advisable to use a file for the coordinate data as in this manner the grid may be checked and the file edited if necessary before putting the model in the wind-tunnel. In addition the points will be traversed more quickly as there will be no intermediate stops to define grid points.

(4) Calibration of the probe-balancing transducers with respect to quadrant and roll error angles. A program has been written to obtain the data necessary to calculate the calibration constants used in the automatic control of the quadrant and roll units (section 6.2.2). After being driven manually to a suitable point in the flow, the program aligns the probe with the local flow vector. With the quadrant fixed at the balanced value, roll is moved away in steps and the out-of-balance pressure signal recorded. This is repeated until the limiting voltage levels are reached in both directions (see Fig 14). The whole procedure is repeated with roll fixed at the balance value and the quadrant stepped away. To establish the roll calibration the first of the above stages needs to be done at several points in the flow having different values of the quadrant angle in the balanced condition. Thus this procedure is best done when the test model is present in the wind tunnel (see section 7 for the typical test procedure).

6.3.2 Data reduction

The flow chart for the program to reduce the raw data acquired with the traverse control program to corrected coefficient form is shown in Fig 15. The input raw data and the principal output data (processed data) are held in standard wake-traverse files (Fig 11). The calibration data is held in an ASCII format file, details of which are given in Table 6. The program may be run on a PDP-11 computer without operator intervention by preparing a file containing a list of the appropriate commands and file names for the processing required, or alternatively the program may be directly controlled from the console typewriter.

After reading the name of the calibration file, the calibration data is input by a free-format read subroutine. Using the symbols defined in Table 6 for the calibration file, the following operations are performed:

(1) Calculate the empty-tunnel dynamic pressure (q_0) and total head pressure (H_0) corresponding to the wind-tunnel reference-pressure difference (M-N) specified in the file, by means of quadratic interpolation in the wind-tunnel calibration data.

(2) Calculate the trigonometric functions of the angular calibration constants required in the data reduction process, using some of the relations derived in the Appendix.

078

The name of the raw data file is then read, and checked for existence and correctness of type. The name of the processed data file is read and, if the file already exists, the entire contents of this file is written to a new file ready for adding new processed data. If the file does not exist a new one is created. The numbers of the raw data records at which to start and finish processing in the file are then input. These two records must contain voltages and counter values measured with the wind tunnel airflow at rest ('wind-off' data). A convention followed in the flow-measurement work is to divide the traverse task into a series of 'runs' each prefaced by a comment record and a wind-off data record, and terminated by a wind-off data record, with no wind-off data among the intervening records. The change in the transducer wind-off voltages between the beginning and end of the run is calculated and if this drift exceeds a specified maximum value a warning message is output. Coefficients for the calculation of the effective wind-off voltages during the run, by means of linear interpolation versus record number, are then derived. (Although provision is made for interpolation versus elapsed time, it has not been used as the interpolation versus the data record number has proved sufficiently accurate.) The change in the wind-off zero voltage of the MacDonald transducers has always been negligible.

The main data reduction loop for wind-on data (Fig 15) is begun by reading one line of raw data. The cartesian coordinates are calculated as:

$$\left.\begin{aligned} x &= -0.02x_m \\ y &= -0.02y_m \\ z &= 0.02z_m \end{aligned}\right\} \qquad (1)$$

where (x, y, z) are in millimetres and the sign convention of Fig 16a is used. The quadrant and roll angles that would be measured by a perfect probe are calculated using the measured angle (θ_m, ϕ_m) and the relations (A-1), (A-2) and (A-3) derived in the Appendix. The corresponding pitch and yaw angles are calculated using equations (A-4) and (A-5).

The probe pressures are calculated using the quintic coefficients for each transducer held in the calibration file (see Table 6). A measured local dynamic pressure is calculated as:

078

$$q_m = (M-N) - (M-H_m) - \frac{[(Q_1-N) + (Q_2-N) + (R_1-N) + (R_2-N)]}{4} \qquad (2)$$

where the symbols are as defined in Fig 4 and Table 6, and the quantities in brackets ( ) are experimentally measured. This dynamic pressure is then used to obtain the true local dynamic and total-head pressures by means of quadratic interpolation in the calibration table for the pressure-measurement probe held in the calibration file (see Table 6). The ratio of the true local dynamic pressure q_t, to the empty-tunnel value q_0 is given by:

$$\frac{q_t}{q_0} = \left(\frac{M-N}{q_0}\right) \cdot \left(\frac{q_t}{q_m}\right) \cdot \frac{1}{(M-N)} \cdot q_m \qquad (3)$$

where the first factor is derived from the wind-tunnel calibration, and the nomenclature of Table 6 is used. (The wind-tunnel wall blockage effect on the dynamic pressure may be calculated in the normal manner or, if sufficiently detailed traverse measurements are made, this effect may be derived directly[2] from the experimental results.) A total head pressure coefficient is then defined as:

$$C_H = \frac{H_t-H_0}{q_0} = -\left[\left(\frac{M-N}{q_0}\right) \cdot \left(\frac{M-H_m}{M-N}\right)\right] - \left(\frac{H_0-M}{q_0}\right) - \left[\left(\frac{q_t}{q_0}\right) \cdot \left(\frac{H_m-H_t}{q_t}\right)\right] \qquad (4)$$

and a static pressure coefficient as:

$$C_p = \frac{S_t-S_0}{q_0} = C_H - \left(\frac{q_t}{q_0}\right) + 1 \; . \qquad (5)$$

The Cartesian velocity components U, v, w of the local flow vector V are determined using the equations (A-6) in the Appendix. The processed data and the derived quantities (*eg* velocity components) are listed on the line printer and the basic data stored in file type 3 format. The processing is continued until the terminal wind-off record is reached when either the program may be deleted or re-entered for another data reduction run.

078

In order to be able to use the same analysis software for data originating from the pilot wake-traverse system developed for the 4ft × 3ft low-speed wind-tunnel at RAE Farnborough, the data reduction program for the latter system[2] has

been modified to produce the same format of processed data as the program described above.

6.3.3 File services

The general considerations discussed in section 6.1 have led to the use of a set of fixed-format binary files for the various data types associated with the wake-traverse system (Table 4). As the file-handling software provided by DEC for the PDP-11 computer is largely confined to operations with files of characters (*ie* ASCII format), it was necessary to write special software for handling the traverse system files. Typical tasks for which software is required include:

(1) Creating a file of traverse grid coordinates by direct data input, rather than by using a FORTRAN program (as referred to in section 6.3.1),

(2) Editing, truncation and merging of files of raw traverse data prior to data reduction,

(3) Editing and truncation of processed data to remove unwanted data,

(4) Scaling of columns of processed data to apply additional corrections,

(5) Searching for specific data,

(6) Sorting of the processed data to aid plotting and subsequent analysis, and

(7) Listing of the data for monitoring purposes.

In consequence a series of program modules was written to provide the comprehensive set of facilities listed in Table 7. As with the data reduction program (section 6.3.2), this program may be run either using a file to supply the commands and any relevant data, or by direct input via the console typewriter. To provide some protection against user errors all the functions which operate on an existing file create a new file from the old file without deleting the old file. The same program modules are used for all the types of files. Each type of file has a layout array, referenced by the file type number (see Table 4), which is used to check the compatability of the specified file with the requested function, and to define the data record size and contents for the input and output operations.

The edit function has seven modes (listed in Table 7) for edit operations on individual data records, including a replace mode to modify one item of data

078

in a given column of a record. The edit requests are stored in a core buffer until an 'F' (finish) mode is requested (or the buffer becomes full) when the edits are applied to the specified file. By adopting this approach it becomes possible to include an 'E' (error) mode to remove the immediately previous edit request.

The order function allows the data from a group of processed data files to be sorted into ascending order with respect to the cartesian coordinates (x, y, z). One, two or all three of the axes (X, Y, Z) may be used as the independent variable for the sort, and any order of sorting may be specified by the user. Thus data may be arranged in planes (Y, Z), (X, Z) or (X, Y) and along lines of constant x, y or z respectively. A binary sort procedure is used in conjunction with the largest possible buffer in core store and a large contiguous file on disc. The amount of contiguous storage space available on disc is the only limit on the amount of data that can be sorted by this procedure.

The scale function can be used to modify one column of a file, between certain line or record numbers. Thus the origin of coordinates may be changed, pressure coefficients scaled or angles corrected for example.

As in the traverse control program a 'help' function is provided to print out some explanatory information on the line printer for the benefit of the inexperienced user.

7 INITIAL TESTING OF THE TRAVERSE SYSTEM

In the previous five sections individual aspects of the wake-traverse system have been described in detail. However, the traverse system was periodically reviewed as a whole system, for example by making exploratory measurements in a wind tunnel, in order to highlight any performance limitations. There was thus a continuing process of identifying problem areas, modifying the system and re-evaluating performance. As faults or obstacles were removed the accuracy and repeatability of measurement, ease of use and reliability increased. Measurements of complex flow fields with the current system indicate that any limitations in the mechanical, electronic, pneumatic and software components result in errors that may be neglected for all the types of analysis so far performed. While it is not practicable to describe in detail the sequence of events that led to the present state of the system, the main areas of system testing are briefly described below.

078

Much of the initial testing of the Cartesian traverse system and its associated software was done with two of the traverse axes (X and Z) mounted

outside the wind tunnel. Once all three Cartesian axes were available in the wind tunnel they were checked for linearity of movement and deflection under load. The five-tube probe was checked for correct motion in quadrant and roll by sighting with a telescope; any eccentricity in the rotation of the probe tip was removed by gentle bending of the probe stem. Repeated use of these drive axes caused progressive slackening, and hence backlash, that was prevented by some minor modifications (*eg* pinning of mating components). The pneumatic lines from the pressure measurement probe to the control equipment were checked for leaks using the out-of-balance pressure transducers as these are very sensitive.

Extensive tests were made with the analogue electronic signals to ensure that repeatable and accurate voltages were measured at the computer. The transducers used for pressure measurement proved to be sensitive to variations in the ambient temperature and were therefore suitably insulated. Other factors found to be restricting the accuracy of measurement included the pressure of mains frequency hum in the output signal of the amplifiers and an offset in the voltages at the computer relative to those at the output of the first amplifier stage. Careful isolation of the power supplies and rerouting of the common earth line (a heavy gauge copper cable is used for the latter) removed these effects. Although the analogue to digital converter in the computer has a nominal overranging capability of ±20 V testing showed that if the amplifiers processing the transducer signals are allowed to saturate (*ie* typically ±13 V) interactions occur between these voltages and the others being measured at the computer. The amplifier circuitry was therefore modified (by using parallel, reverse diodes) so that the output voltages are limited to a value just greater than 10 V.

A series of tests were next made with the wind-tunnel air flowing but without a model in the working section. The Cartesian traverse system was first checked for satisfactory operation under a steady wind load. In a uniform flow it was found that after suitable adjustment of the speeds of the stepper motors on each axis trouble-free operation was possible at up to 80 m/s windspeed. Subsequent experience has shown that the sideloads on the vertical strut may become too large for operation at this speed if the flow being traversed contains regions of strong crossflow (*eg* a wing under high-lift conditions).

The interference effects of the traverse gear on the flow to be traversed were then measured in the following manner. The flow at the usual reference point (the virtual centre of the underfloor mechanical balance) was calibrated using a standard pitot-static probe with the working section otherwise empty. The calibration was repeated with the traverse gear installed but with its

078

pressure-measurement probe removed. Movement on all axes of the Cartesian traverse gear enabled three interference effects to be quantified:

(1) The effect on the wall reference pressures used in the wind-tunnel speed control and monitoring systems,

(2) The effect on the pressures at the reference point, and

(3) The effect on the pressures measured by the five-tube probe when it is mounted on the quadrant and roll unit.

The total pressure at the reference point was unaffected by the presence of the traverse gear. It was found that while motion on the X and Z axes had no measurable effect on the reference wall static pressures, motion on Y led to changes in the tunnel air speed because of the variation in the upstream influence of the traverse struts as they were moved across the tunnel. However the effect is sufficiently small (a change of 0.0010 in C_p was generated by a movement of 2.7 m on Y) that it can normally be neglected. As the change in pressure induced is linearly dependent on Y a correction can easily be applied if desired. Having accounted for this effect ((1) above), motion on the Y and Z axes was found to have no measurable influence on the pressures at the reference point ((2) above). When the traverse gear was moved along the X axis towards the reference point there was a decrease in static pressure coefficient of 0.0010 for a movement of 1.4 m. This blockage effect ((2) above) can be neglected for flow measurement work when the system is used with cross-flow traverse planes several chord lengths downstream of a model but may become significant if flow fields in the immediate vicinity of a model are to be investigated. The third type of interference referred to above was quantified by positioning the probe carrier unit so that the tip of the standard pitot-static probe was the same distance from the vertical struts and the probe-carrier roll unit as the virtual centre of the quadrant (*ie* the tip of the five-tube probe). An increase in the static pressure of 0.0024 was measured relative to the value obtained when the struts were at the most rearward position (where this interference would be negligible). Thus all velocities measured with the five-tube probe will be correspondingly low and a correction can be applied in the form of a negative blockage factor.

078

The pressure-measurement probe was calibrated for the variation of the measured dynamic and total pressures with the true dynamic pressure. After making pressure measurements with the five-tube probe, which had been aligned with the freestream velocity vector for a range of windspeeds, it was replaced

by a standard pitot-static probe using a mounting block (attached to the vertical face on the probe carrier unit) that allowed the tip of the probe to be positioned at the same point as the tip of the five-tube probe. The results of a typical calibration, performed at two points in the wind-tunnel working section, are shown in Fig 17. Above a measured dynamic pressure of 1500 N/m^2 (which is equivalent to a velocity of 57 m/s approximately) the scatter of the calibration is less than ±0.0010 of the true dynamic pressure. The small departure of the measured from the true total head pressure at the lower values of dynamic pressure (Fig 17b) may be due to some Reynolds number effect on the flow in the region of the central tube. (The probe alignment had to be varied slightly with windspeed in order to maintain zero pressure difference in each pair of side tubes).

Further interference effects were investigated with a simple model wing mounted on the underfloor mechanical balance of the No.2 11½ft wind tunnel. A short series of force and moment measurements for this wing, with the traverse struts and probe unit in close asymmetric proximity and far removed from the wing, showed that any interference of the traverse gear on the overall loads was negligible.

Before determining the angular corrections associated with the quadrant and roll motions, the characteristics of the servomechanism drive control for these axes were determined in order to achieve the best overall performance for a wide variety of flow conditions. The response of the pneumatic system was measured as described in section 4.2 and the electronic component values selected to give the most rapid stable response for the complete servomechanism. The gain of the amplifier used to process the signal from the local dynamic-pressure transducer was adjusted to give a high angular sensitivity for the servomechanism without instability (*ie* hunting in the drive due to the presence of noise in the input signal). Calibrations of the out-of-balance pressure transducers were then made both directly and with the phase-advance and non-dimensionalising circuitry included. Some typical results are shown in Fig 14.

The corrections to the measured quadrant and roll angles were determined using the relations derived in the Appendix in conjunction with angular measurements made at several points behind a wing. These measurement points were chosen so that the flow vector either had no pitch or no yaw. In this manner the measurements could be repeated using a simple two-tube pitchmeter (or yawmeter, depending on its orientation) to determine the true pitch or yaw of the flow relative to the wind-tunnel datum directions shown in Fig 16. The two-tube

078

pitchmeter was mounted in the same way as the standard pitot-static pressure probe mentioned above. From the differences in pitch and yaw angles obtained from these two sets of measurements the pitch (α_{RA}) and yaw (ψ_{RA}) of the rotational axis of the roll unit were derived (see Fig 16a and the Appendix). As these differences in pitch and yaw angles varied little over the range of points chosen in the flow it was deduced that the quadrant and roll units were sufficiently axisymmetric to make any interference effects on local flow angles negligible.

The normal procedure for a test run in a flow field investigation is given in Table 8 and some typical results[4] are shown in Figs 18 and 19. These results are for two identical line traverses made a month apart and with approximately 4000 intervening flow measurements. Fig 18 shows the variation of the static and total pressure coefficients through the quasi-two-dimensional part of the wake from a rectangular wing and Fig 19 shows the corresponding variation of pitch and yaw angles through the wake. These results support the estimates for the overall measurement precision previously quoted:

± 0.0010 on the pressure coefficients

± 0.02 on the angles.

Within one traverse run the precision of measurement is often better than this and it is probable that much of the difference between the results for the two runs shown in Figs 18 and 19 arises from minor alterations in the wake due, for example, to variations in the surface finish of the model.

8 CONCLUDING REMARKS

A computer-controlled system has been developed for making extensive flow-field investigations in the large low-speed wind tunnels at RAE. By using computer files to hold a series of traverse control modes and the coordinates for the points in the required traverse grid, and computer control of the alignment of a pressure-measurement probe with the local flow vector, data acquisition rates of up to 100 points an hour can be achieved whilst maintaining a high accuracy of measurement (typically ± 0.0010 on pressure coefficients and $\pm 0.02^{\circ}$ on angles). This rate of data acquisition may be significantly increased if these accuracy levels are relaxed, as may be acceptable for many flow-measurement tasks.

The wake-traverse system is a very powerful tool, typical applications of which include:

(a) Separation of the components of aircraft drag under high-lift conditions and formulation of a means of predicting drag in these circumstances.

078

(b) Understanding a wide range of complex flow phenomena; in particular vortex flows of the type that emanate from wing tips, flap and slat ends, wing and tail body junctions and leading-edge strakes.

(c) Identifying flow features such as local separations, local increases in profile drag, and regions of large downwash so that the 'cut and try' element in development work to reduce drag and improve tailplane performance, for example, may be minimised.

Work in the first two categories is currently in progress at RAE. An important aspect of these applications is the influence of Reynolds number on the flow structure and thus the system has been made compatible (particularly in regard to the control software) with the instrumentation[10] for the 5m pressurised low-speed wind tunnel at Farnborough, so that a similar traverse facility can be provided for that wind tunnel without the need for a large effort on software.

While the present wake-traverse system is capable of reliable operation at a high data acquisition rate, continued use of the system at rates greater than 100 points an hour would make a number of improvements desirable in order not to overload the user. On-line plotting would be essential in order that the progress of the traverse measurements could continue to be adequately monitored, and work is in hand to provide this facility. The other modifications required are concerned with automating a number of auxiliary functions (*eg* recording the wind-tunnel airspeed, and model forces, calibrating transducers and fault diagnosis), again aimed at relieving the load on the operator.

An ultimate limit on the data acquisition rate of about 500 points an hour is set by the response time for pressure measurement in the current system. This limit could be removed by mounting the pressure transducers immediately downstream of the quadrant and roll probe unit and refining the servomechanism control to handle the noisier error signals. However transducers having a lower sensitivity to temperature variations would be required if the current precision of pressure measurement is to be maintained.

Acknowledgments

The development of an automatic wake-traverse system has involved the application of expertise from a number of disciplines and the system described above represents the result of over 6 years of team work. The author is particularly conscious of the major contributions of the following: Mr E.C. Brown and Mr R.C.W. Eyre (RAE), for initial design work on the Cartesian traverse system,

078

Mr J. Clough (TEM Ltd), for development of the Cartesian traverse system and the quadrant and roll probe unit, Mr R.J. Perryman (PKS Designs Ltd), for development of the Cartesian traverse control unit, Mr W.R. Crisp (RAE), for initial design of the servomechanism to control the quadrant and roll units, Mr R.P. Purkiss (ex RAE), for development of the special computer interfaces and the first prototype control software, Mr R.P. Hill (RAE), for development of the current control software, Mr I.M. Ray (HSA Ltd), for development of the control software for probe balancing, and Mr D.G. Dobney (RAE), for his assistance during the initial proving tests of the complete system.

078

Appendix

THE DERIVATION OF THE FLOW PITCH AND YAW ANGLES FROM THE MEASURED QUADRANT AND ROLL ANGLES

The system of angles used in the calculation of the flow pitch and yaw angles is shown in Fig 16. The roll angle is set up initially by driving the roll unit until the quadrant is horizontal, as measured by an inclinometer, and then entering the counter value corresponding to 90° roll (2500) in the appropriate register. The positive sense of roll is anti-clockwise when looking upstream. The zero value of the quadrant angle is determined by aligning the probe with a flow vector using the two combinations of quadrant and roll angles possible within one revolution of the roll unit (see section 4.2). If the indicated quadrant angle is θ_1 at the normal stable balance point, and θ_2 at the unstable balance point, then the actual measured quadrant angle, θ_m, will be $(\theta_1 - \theta_2)/2$ at the stable balance point. It should be noted here that, due to the change of roll angle of approximately 180° between the two balance points, the sense of quadrant motion is reversed and this leads to the negative sign in the expression for θ_m.

Due to asymmetries in the construction of the five-tube probe, the probe stem will not, in general, be parallel to the local flow vector at the balance conditions. By using the two balance points to determine the zero for the quadrant angle, as described above, the direct effect of asymmetries in the two tubes controlling the quadrant motion will be removed. However both roll and quadrant angles need to be corrected for any asymmetries in the two tubes controlling the roll motion. Asymmetries here lead to the roll angles obtained for the stable and unstable balance conditions at one point not being precisely 180° apart (as would be expected if the probe were perfectly symmetrical). From the two balance positions (roll angles ϕ_1 and ϕ_2, say) an angular correction in roll may be derived, ε_R $(= 90^{o} + (\phi_2 - \phi_1)/2)$. However, as is evident from Fig 16b, the magnitude of this correction will vary with the quadrant angle required to align the probe with the local flow vector. The fundamental angular correction is ε_P, the misalignment of the probe stem relative to the flow vector in the plane tangential to the roll direction at the actual balance point. From Fig 16b we have:

$$\tan \varepsilon_P = \sin \theta_m \tan \varepsilon_R \quad . \qquad \text{(A-1)}$$

078

This relationship may be used either to derive the correction ε_p from measurements of θ_m and ε_R at several points in the flow, or to correct flow measurements once ε_p has been determined. Thus the actual roll angle, ϕ, may be calculated from the measured value ϕ_m:

$$\phi = \phi_m + \tan^{-1}\left(\frac{\tan \varepsilon_p}{\sin \theta_m}\right) . \qquad \text{(A-2)}$$

From Fig 16b it can be seen that there is also a correction to the measured quadrant angle:

$$\theta = \cos^{-1}(\cos \varepsilon_p \cos \theta_m) . \qquad \text{(A-3)}$$

Although the velocity components of the local flow vector could be derived directly from these angles, for many analysis purposes it is more convenient to work in terms of the flow pitch and yaw angles. Relative to the rotational axis of the roll unit these angles are:

$$\left.\begin{aligned} \alpha_R &= \sin^{-1}(\sin \theta \cos \phi) \\ \psi_R &= \tan^{-1}(\tan \theta \sin \phi) . \end{aligned}\right\} \qquad \text{(A-4)}$$

If the rotational axis of the roll unit is misaligned with a pitch angle (in the yawed plane) of α_{RA}, and a yaw angle of ψ_{RA} relative to the wind tunnel freestream (and hence the traverse X axis), the true pitch and yaw angles of the flow vector will be:

$$\left.\begin{aligned} \alpha &= \alpha_R + \sin^{-1}(\sin \alpha_{RA} \cdot \cos \psi_R) \\ \psi &= \psi_{RA} + \tan^{-1}\left(\frac{\tan \psi_R}{\cos \alpha_{RA}}\right) . \end{aligned}\right\} \qquad \text{(A-5)}$$

The velocity components for the flow vector may then be calculated as:

078

$$\left.\begin{aligned} \frac{u}{V} &= \cos\alpha \cos\psi \\ \frac{v}{V} &= \cos\alpha \sin\psi \\ \frac{w}{V} &= -\sin\alpha \end{aligned}\right\} \qquad \text{(A-6)}$$

using the same nomenclature as Maskell[2] for the velocity components (see Fig 16a).

By differentiating equations (A-4) the effect on the calculated pitch and yaw angles of errors in the quadrant and roll angular measurements may be determined. As would be expected any error in the measurement of the quadrant angle is all transferred to the pitch and yaw angles, the relative proportions being fixed by the roll angle. However the calculated pitch and yaw angles are relatively insensitive to errors in the roll angle measurement and the magnitude of the error is an inverse function of the quadrant angle. Thus if the quadrant angle is 1°, an error of 0.01^{o} in pitch angle will result from a roll angle error of 0.57^{o} (which is equivalent to 16 steps in the roll drive). A quadrant angle of 5° requires a roll angle error of 0.11^{o}, and a quadrant angle of 10° requires a roll angle error of 0.06^{o} to produce the same 0.01^{o} error in pitch angle. With a resolution of 0.036^{o}, the roll unit is therefore capable of producing a resolution of 0.01^{o} on both pitch and yaw angles for most values of the quadrant angle that are commonly encountered ($|\theta| < 15^{o}$). (Even with a quadrant angle of 50° the resolution is still 0.03^{o}.) Obviously the overall angular accuracy obtained in traverse measurements is not as good as these resolution figures, but repetition of flow measurements indicate that the accuracy is only a factor of between 2 and 3 times worse than the resolution (*ie* an accuracy of $\pm 0.02^{o}$ when $|\theta| < 15^{o}$).

Table 1

CHRONOLOGY OF MAJOR ACTIVITIES AND EVENTS IN THE DEVELOPMENT OF THE WAKE-TRAVERSE SYSTEM

Year	Activity or event
1968	Design requirements for a traverse system formulated by RAE.
1969	Design studies of possible Cartesian axes configurations by TEM Ltd. Wind tunnel tests by RAE to determine loads on strut sections. Initial set of requirements for automatic control formulated by RAE.
1970	Detail design and manufacture of chosen XYZ configuration by TEM Ltd. Design and development of servomechanism to control pressure measurement probe (RAE).
1971	Detail design requirements for XYZ control unit formulated by RAE. Possible configurations for using a nulling five-tube probe considered by TEM and RAE. Detail design of chosen quadrant and roll configuration by TEM Ltd.
1972	Manufacture of quadrant and roll system by TEM Ltd. X and Z axes of traverse assembled and tested in 13ft × 9ft tunnel at RAE. Control unit for quadrant and roll system designed and made by RAE. Methods for computer control and data acquisition reviewed by RAE. Control unit for XYZ system manufactured by PKS Ltd. Computer system specified and ordered from DEC Ltd. Detail design of interfaces between computer and wind-tunnel equipment by RAE.
1973	Testing of quadrant and roll control system in 13ft × 9ft tunnel at RAE. X, Y and Z axes of traverse assembled in No.2 11½ft tunnel at RAE and tested with XYZ control system. Development of XYZ control system by RAE. Manufacture and testing of computer interfaces by RAE. Computer system delivered. Development of software by RAE using X and Z axes outside No.2 11½ft tunnel at RAE.
1974	Complete system assembled and tested in No.2 11½ft tunnel at RAE. Development of mechanical, electronic, pneumatic and software systems by RAE. Completion of prototype software for control and data acquisition.
1975	Calibration of system and measurement of interference effects in No.2 11½ft tunnel. First extensive measurements of wake from a wind-tunnel model. Definition, development and implementation of revised software for control and data acquisition by RAE and HSA Ltd. Major improvements complete - system available for routine testing.
1976	Documentation for hardware and software.
1977	Modification of 13ft × 9ft tunnel at RAE to accommodate X,Y and Z traverse.

Table 2

COMPUTER CONTROL MODES FOR CARTESIAN TRAVERSE SYSTEM

Sixteen control modes are available in a binary coded form in bits 3 to 6 of the TGBR2 control register of the Cartesian traverse control interface (Fig 7). Currently only ten modes are used:

Mode	Function
0	Input current absolute position data to the computer (via TGTR1 and TGTR2) for one axis
1	Output data for an index to the Cartesian traverse control (from TGBR1 and TGBR2) for one axis
2	Check the synchronisation of the drive motors on one axis by running the motors at slow speed until a light signal is detected
3	Clear latch on error interrupt from automatic synchronisation check during an index
4	Drive motors to datum (zero) position on counter for one axis
5	Set position counter to zero on one axis
6	Set position counter to value in TGBR1 and TGBR2 for one axis
7	Temporarily inhibit motion on one axis (the motion continues when this mode is removed)
8	Terminate motion on one axis (the motion does not continue when this mode is removed)
9	Clear the latch on all the error interrupt signals

The axis for a particular mode is specified by setting one of the 3 bits in TGBR2 (0, 1 or 2).

078

Table 3

SIGNAL VOLTAGES FROM THE MANUAL CONTROL EQUIPMENT THAT ARE INPUT TO THE COMPUTER

All the voltages are processed by signal conditioning modules so that they are in the range ±10 V. The analogue to digital converter (Fig 9) can tolerate over-ranging to ±20 V but interference with the conversions on other channels occurs if the voltage on one or more channels exceeds ±13 V.

Channel number	Signal
0	Output from transducer measuring local dynamic pressure (H_m-P_s)
1	Output from transducer measuring quadrant error pressure (Q_1-Q_2)
2	Output from transducer measuring roll error pressure (R_1-R_2)
3	Output from sensitive transducer measuring total pressure $(M-H_m)$
4	Output from transducer measuring roll side tube pressure 2 (R2-N)
5	Output from transducer measuring roll side tube pressure 1 (R1-N)
6	Output from transducer measuring quadrant side tube pressure 1 (Q1-N)
7	Output from transducer measuring quadrant side tube pressure 2 (Q2-N)
8	Output from coarse range transducer measuring total pressure $(M-H_m)$
9	Output from quadrant servocontrol after phase advance and division modules $V_{\Delta Q}/V_q$
10	Output from roll servocontrol after phase advance and division modules $V_{\Delta R}/V_q$

The nomenclature for the pressures is defined in Fig 4 and the phase advance voltages in Fig 5.

Table 4

LIST OF STANDARD FILE TYPES EMPLOYED FOR FLOW-FIELD MEASUREMENT AND DATA ANALYSIS

The first (title) record of each standard file type is the same. It consists of 32 words allocated as follows: words 1-24: file title, word 25: file type number (6 are currently used), word 26: generation number and words 27-32: date of creation.

The remaining records of the files are all of a fixed length which varies according to the file type. The FORTRAN real variables (2 words per variable) are always placed first on the data records and are followed by the integer variables (1 word per variable) if there are any.

Details of the calibration data file, which is the only basic wake-traverse file that is not in this form, are given in Table 6.

File type number	Number of words per record	Number of real variables on record	Type of data file	Format - order of variables on the record
1	32	14	Raw traverse data from 4 × 3 tunnel	x_m, y_m, z_m, α, ψ, H_m-M, P1-N, P2-N, Y1-N, Y2-N, M-N, and the remaining 10 words are unused.
2	32	14	Raw traverse data from No.2 11½ft tunnel	x_m, y_m, z_m, θ_m (quadrant), ϕ_m (roll), H_m-P_s, Q_1-Q_2, R_1-R_2, $(M\text{-}H_m)_{low}$, Q_1-N, Q_2-N, R_1-N, R_2-N, $(M\text{-}H_m)_{high}$ and time in s, speed m/s, data point, balance indicator for servos (integers).
3	15	7	Processed data (from either source of raw data)	x, y, z, α, ψ, C_H, C_p and datapoint (integer).
4	12	6	Analysis data (for analysis such as drag in which traverses made on planes x = constant)	y, z, α, ψ, C_H, C_p or for some purposes a format having Cartesian velocity components instead of α, ψ, C_H and C_p
5	32	Varies	Drag analysis master file	Records are formatted in pairs, each pair giving details of an associated analysis file. The first record contains the file identification and the second model details and what the file is used for
6	6	3	Coordinate data for points on a traverse grid	x_m, y_m, z_m

Table 5

CONTROL MODES AVAILABLE IN THE TRAVERSE CONTROL PROGRAM

The 18 control modes available may be called by typing the appropriate letter. Alternatively it is possible to create a file of commands (*ie* a list of control modes and the associated data) that defines a traverse task, and this file may then be used to control the traverse operation without intervention by the user.

Mode	Name	Explanation and associated data
A	Automatic	Control of quadrant and roll units transferred to computer
B	Begin	Allow the user to reinitialise the program (file names, devices etc)
C	Coordinates	Enables the user to reset the x, y, z traverse coordinates
D	Dump	Dumps data from raw data buffer file (contiguous form), used by the control program, to the standard format raw data file (file type 2)
E	End	Close files used, terminate control program and return to DEC operating system
F	File	Use a file specified to obtain points at which traverse measurements are to be made (file type 6). Data: file name
G	Grid	Define x, y, z traverse grid relative to current position. Data: N_1 lines, each separated by (Δx_1, Δy_1, Δz_1), consisting of N_2 points spaced by (Δx_2, Δy_2, Δz_2)
H	Help	Print out an explanation of the traverse control modes
I	Increment	Move the Cartesian traverse by an increment (data) Δx, Δy, Δz
K	Constants	Change value of constants in the control program modules for quadrant and roll units. Data: calibration factors, time delays, number of attempts to achieve balance, sample sizes for pressure measurement, speed of drive for quadrant and roll, and accuracy desired for final balance.
L	Line	Define an x, y, z traverse line relative to the current position. Data: N points separated by increments each (Δx, Δy, Δz)
M	Manual	Control of quadrant and roll units transferred to the operator

Table 5 (concluded)

Mode	Name	Explanation and associated data
P	Point	Move the Cartesian traverse to the point x, y, z (data)
Q	Quadrant calibration	At a fixed (x, y, z) point the probe is aligned with the flow for the two possible positions of roll; from this is derived the true quadrant angle and the counter is reset
R	Repeat	Remain at same (x, y, z) but repeat probe alignment with local flow direction
S	Subtitle	Allows a subtitle or comment to be inserted in the raw data buffer file (and thence in the standard raw data file). Data: up to 52 characters.
T	Tape	Use a paper tape to obtain points at which traverse measurements are to be made
Z	Zero	Enables user to read and store transducer voltages when the wind tunnel is not in operation. No control of Cartesian traverse or quadrant and roll units

In addition to these modes for defining wind-tunnel flow traverses, a test mode is available to drive the tractor units on the X, Y, Z traverse axes, omitting any control of the quadrant and roll motions

Table 6

FORMAT OF THE WAKE-TRAVERSE CALIBRATION FILE

Whereas all the other standard wake-traverse files (see Table 4) could be defined with a fixed format, the variety of calibration data needed in the data processing prevented this being done for the calibration data file. As there are relatively few calibration data and they are only infrequently accessed, ASCII format is used, so that the file can be modified if necessary by means of standard DEC PDP-11 file-editing software. All the data (except the title) are read by a free-format read subroutine so that the layout of the data within the file is completely free.

Item No.	Name, symbol and dimensions	Comments
1	Title	One line of up to 72 characters
2	Wind tunnel reference pressure difference (M-N) in N/m^2	(M-N) pressure difference, shown in Fig 4, corresponding to wind-tunnel freestream speed required for traverse test
3	Wind-tunnel calibration: Number of lines of data, NTCAL each containing:	In ascending order of values of (M-N)
	(M-N) N/m^2	Tunnel reference pressure difference
	$\frac{(M-N)}{q_0}$	Speed calibration of empty wind-tunnel, q_0 is the dynamic pressure
	$\frac{(H_0-M)}{q_0}$	Total lead calibration of the empty wind-tunnel
4	Calibrations for six pressure transducers: Quintic coefficients: a_0, a_1, a_2, a_3, a_4, a_5	Quintic: Pressure = $a_0 + a_1V + a_2V^2 + a_3V^3 + a_4V^4 + a_5V^5$ Order of lines: (see Fig 4) $M-H_m$(high), Q_1-N, Q_2-N, R_1-N, R_2-N, $M-H_m$ (low)
5	Calibration of pressure-measurement probe: Number of lines of data, NHCAL each containing:	In ascending order of values of q_m
	q_m N/m^2	Measured dynamic pressure: From Fig 4 = $H_m - \frac{1}{4}(Q_1 + Q_2 + R_1 + R_2)$
	$\frac{q_t}{q_m}$	Speed calibration, q_t is the true dynamic pressure
	$\frac{H_m - H_t}{q_t}$	Total lead calibration; H_m is the measured value and H_t is the true value

Table 6 (concluded)

Item No.	Name, symbol and dimensions	Comments
6	Three angular calibration constants: Roll tube angular position error, RPE degrees Pitch of the rotational axis of the roll unit, RAPTCH degrees Yaw of the rotational axis of the roll unit, RAYAW degrees	 ε_p of the Appendix and Fig 16b α_{RA} in Fig 16a ψ_{RA} in Fig 16a

Table 7

FUNCTIONS AVAILABLE IN THE FILE SERVICES PROGRAM

Function	Name	Explanation and associated data (in all cases except functions F and H a file name is input)
C	Create	Set up a new traverse data file in one of the standard types listed in Table 3. The file type number and data are input from the console typewriter
D	Datapoint	Find the line(s) in a file containing a datapoint specified by input from the teletype keyboard (only file types 1, 2 and 3)
E	Edit	Form a new file by modifying lines in an existing file. The following seven edit modes are available:

Mode	Name	Explanation (all except E, F and T require a line number to be input)
C	Comment	Add a comment line (only file types 1 and 2)
D	Delete	Delete a line
E	Error	Ignore the immediately previous edit mode requested
F	Finish	Apply edits to the file and obtain the next function
I	Insert	Insert a new line of data in the file
R	Replace	Replace one item in a given line of a file
T	Title	Change the title of the file

F	Finish	Terminate the program and return to the DEC operating system
H	Help	Print out an explanation of the file services available
L	List	List a file on the line printer. Lines to start and end input from keyboard
M	Merge	Form a new file by merging several old files of the same type
O	Order	Sort processed data into ascending order versus cartesian coordinates
S	Scale	Factor one column: new value = (A × old value) + B where A and B are input from the keyboard
T	Truncate	Form a new file by deleting blocks of lines in an old file

Table 8

TEST PROCEDURE

The experimental procedure listed below assumes that the flow downstream of a model at a fixed angle of incidence is being investigated. Calibrations for the pressure transducers and the probe are assumed to be available.

Step	Item and comments
1	Check the wind-tunnel, model and traverse gear in the tunnel to see that there is no fouling of wires, extraneous object present etc
2	Check the control equipment to see that all the necessary connections have been made etc
3	Switch on all the electronic equipment. (Because of the extended warming up period required for the transducers these are never switched off)
4	Set the x, y, z position counters on the Cartesian traverse control unit to the stored values (normally held in the thumbwheel switch registers)
5	Run the tractor units along the X, Y and Z axes until they are all at the datum marks. Re-position any tractor units if necessary (*ie* if one is out of synchronisation by an integral number of revolutions) and reset the position counters if necessary
6	Start up the traverse-control computer program. Go through the initialisation procedure to define the monitoring devices required and dump raw data if necessary to make sufficient room available in the buffer file
7	Set up the roll angular datum by means of an inclinometer on the quadrant in a horizontal position. Set the roll counter to 2500
8	Switch the mechanical balance on and set the weighbeam position displays to zero
9	Begin the start-up procedure for running the wind tunnel
10	Adjust the offsets on the amplifiers for the pressure transducer signals so that the output voltages are zero, and record this data with the zero mode in the traverse control program
11	Start the wind-tunnel air flow with the traverse gear in the central aft position, and check the wind-tunnel speed control and monitoring pressure gauges
12	Check the mechanical balance readings of lift and drag to ensure that the correct flow conditions are being reproduced

078

Table 8 (concluded)

Step	Item and comments
13	Move the traverse gear to a calibration point (x, y, z). Align the pressure-measurement probe with the local flow vector for both stable and unstable servo positions in roll and set the quadrant counter to the correct angle. Check the roll angular error and record the data with the traverse control program
14	Go through the required grid of points using the traverse control modes. If the test run is very long (over 1 h say) return to the calibration point used at step 13. Monitor run to see if any faults occur or if extra detail is required because of large gradients in the flow. Include comments in the output raw data to indicate the main events of the traverse
15	Return to the calibration point and align probe, record data with program
16	Shut down the wind-tunnel airflow, and when completely stationary record the transducer zero voltages
17	Dump the newly acquired raw data immediately if it is not already on paper tape
18	Exit from the traverse control program if no more traverses are required. Plot raw and/or processed data off line to aid definition of the next traverse

LIST OF SYMBOLS

$a_0, a_1, a_2, a_3, a_4, a_5$	coefficients in quintic equations fitted to calibration curves of pressure transducers
C_H	total head pressure coefficient (relative to H_0)
C_P	static pressure coefficient (relative to S_0)
H	total head pressure; suffices: m measured, t true and 0 empty tunnel
M	reference pressure at maximum section of wind tunnel } see Fig 4
N	reference pressure at nozzle section of wind tunnel } see Fig 4
P_s	static pressure on the stem of the five-tube probe
q	dynamic pressure; suffices: m measured, t true, 0 empty tunnel and s at probe stem
Q_1	pressure measured on the first quadrant side tube of the five-tube probe
Q_2	pressure measured on the second quadrant side tube of the five-tube probe
R_1	pressure measured on the first roll side tube of the five-tube probe
R_2	pressure measured on the second roll side tube of the five-tube probe
S	static pressure; suffices: t true local value, 0 empty tunnel
U	velocity component in the X direction
v	velocity component in the Y direction
V	magnitude of resultant velocity vector
V	voltage; suffices: ΔQ quadrant error, ΔR roll error, q dynamic pressure
w	velocity component in the Z direction
x, y, z	cartesian coordinates; suffix m for measured
X, Y, Z	Cartesian axes
α	pitch angle; suffices: R relative to the axis of the roll unit, RA pitch angle of the axis of the roll unit
ε	angular correction; suffices: R roll, P probe stem, Q quadrant
θ	quadrant angle; suffices: m measured, 1 first balance point, 2 second balance point
ϕ	roll angle; suffices: m measured, 1 first balance point, 2 second balance point
ψ	yaw angle; suffices: R relative to the axis of the roll unit, RA yaw angle of the axis of the roll unit

078

REFERENCES

No.	Author	Title, etc
1	J.Y.G. Evans A. Spence	Development of wind tunnels at RAE. RAE Technical Report 71040 (1971)
2	E.C. Maskell	Progress towards a method for the measurement of the components of the drag of a wing of finite span. RAE Technical Report 72232 (1973)
3	L.F. East	Measurements of the three-dimensional incompressible turbulent boundary layer induced on the surface of a slender delta wing by a leading edge vortex. RAE Technical Report 73141 (1974)
4	D.A. Lovell D.G. Dobney	Initial measurements with an automatic wake-traverse system. RAE unpublished
5	P.J. Butterworth	RAE unpublished
6	D.A. Lovell R.P. Hill	Software associated with an automatic wake-traverse system. RAE unpublished.
7	PKS Designs Ltd	Instruction and servicing manual for wind-tunnel traverse gear. Unpublished (June 1973)
8	W.R. MacDonald	A guide to the design and performance of angular accelerometer transducers with gas rotors. RAE Technical Report 74146 (1974)
9	R.P. Purkiss	Interfaces for the wake traverse system. RAE unpublished (February 1974)
10	R.J. North D.W. Partridge E.C. Brown	A multicomputer instrumentation system for a new pressurised low speed tunnel. Fifth International Congress on Instrumentation in Aerospace Simulation Facilities, 1973

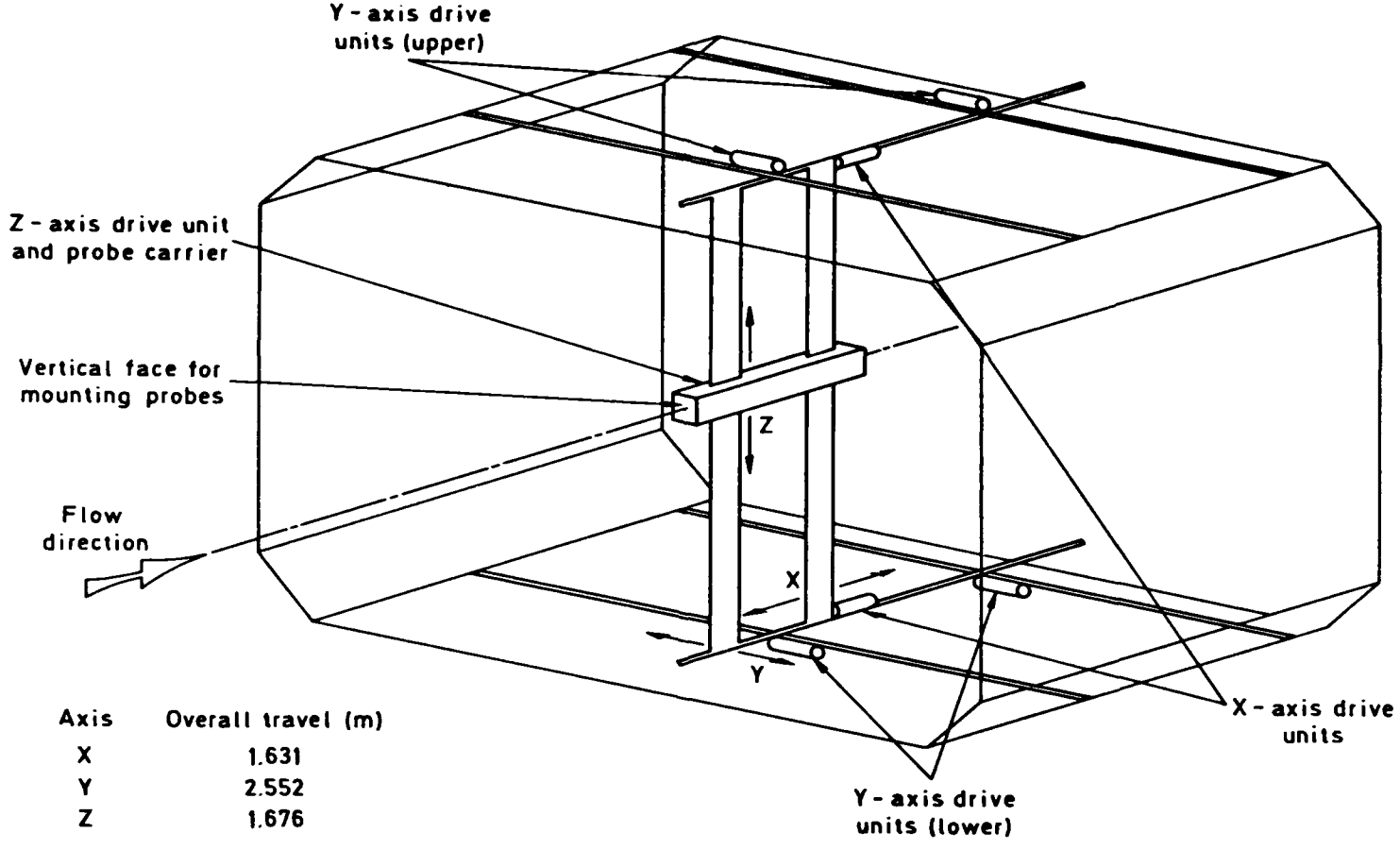

Axis	Overall travel (m)
X	1.631
Y	2.552
Z	1.676

Fig 1 Diagrammatic sketch of the X-Y-Z cartesian traverse system in the wind-tunnel working section

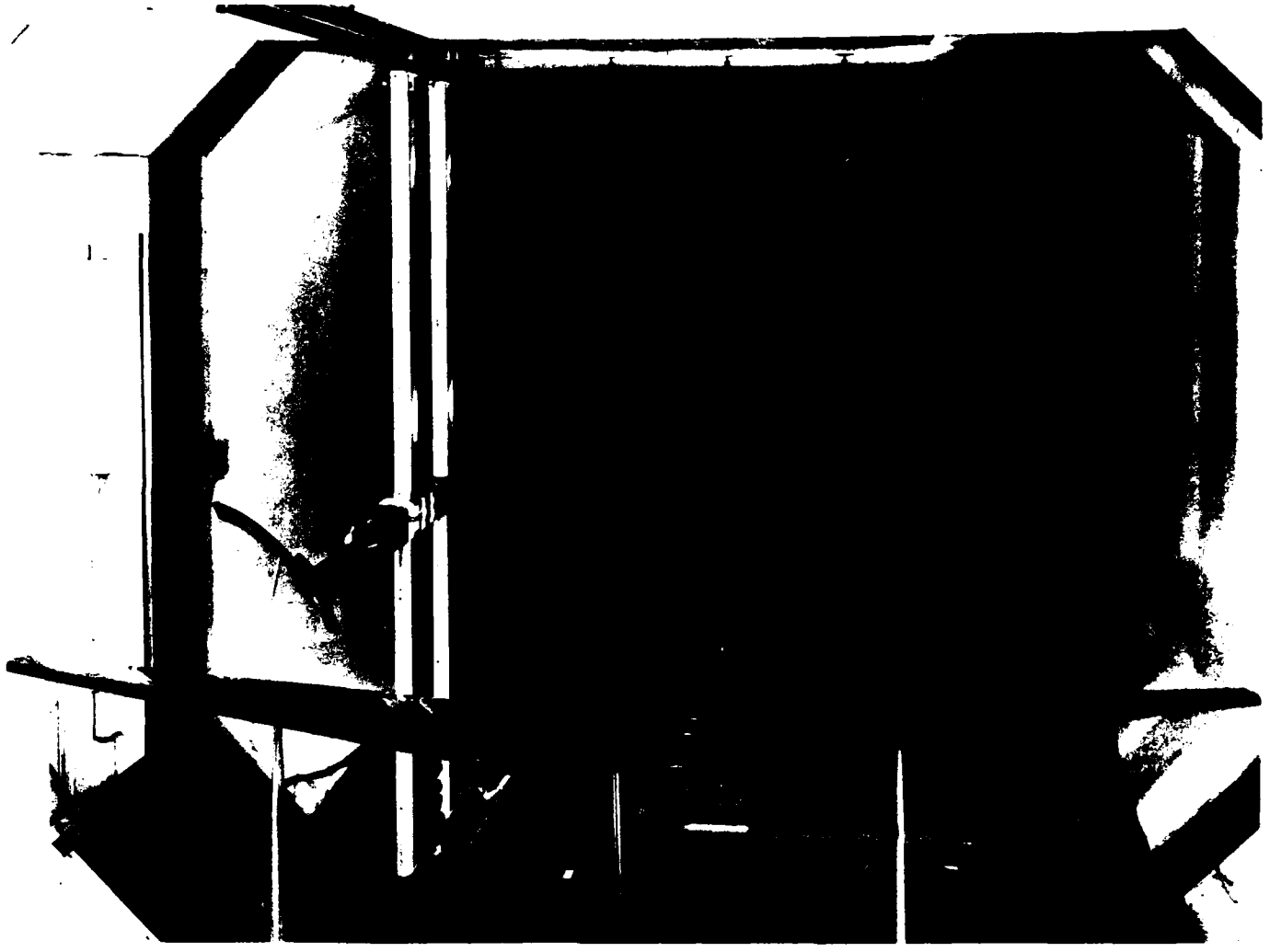

Fig 2 The wake-traverse system installed in the No.2 11½ft low-speed wind tunnel

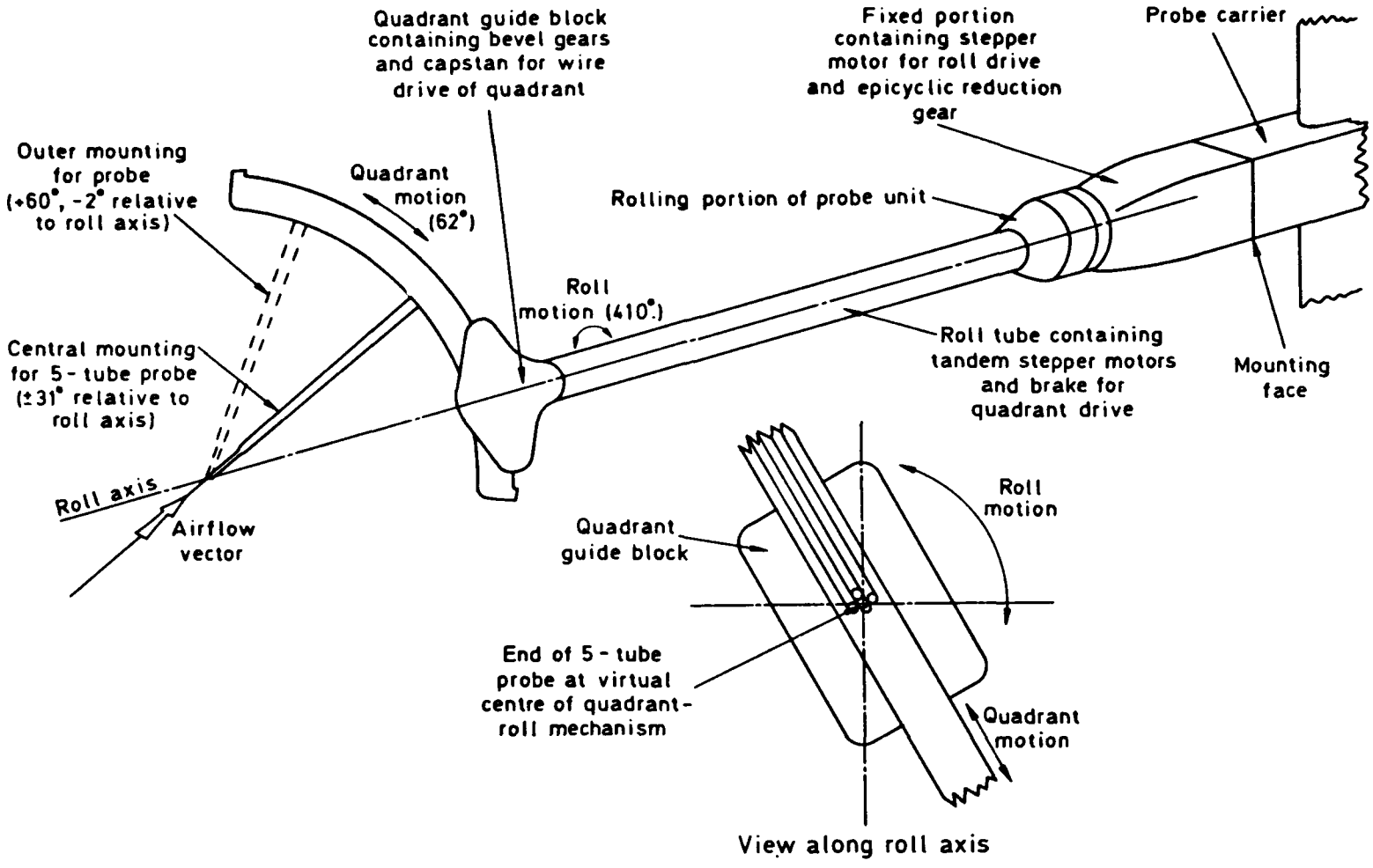

Fig 3 Diagrammatic sketch of the quadrant and roll probe unit

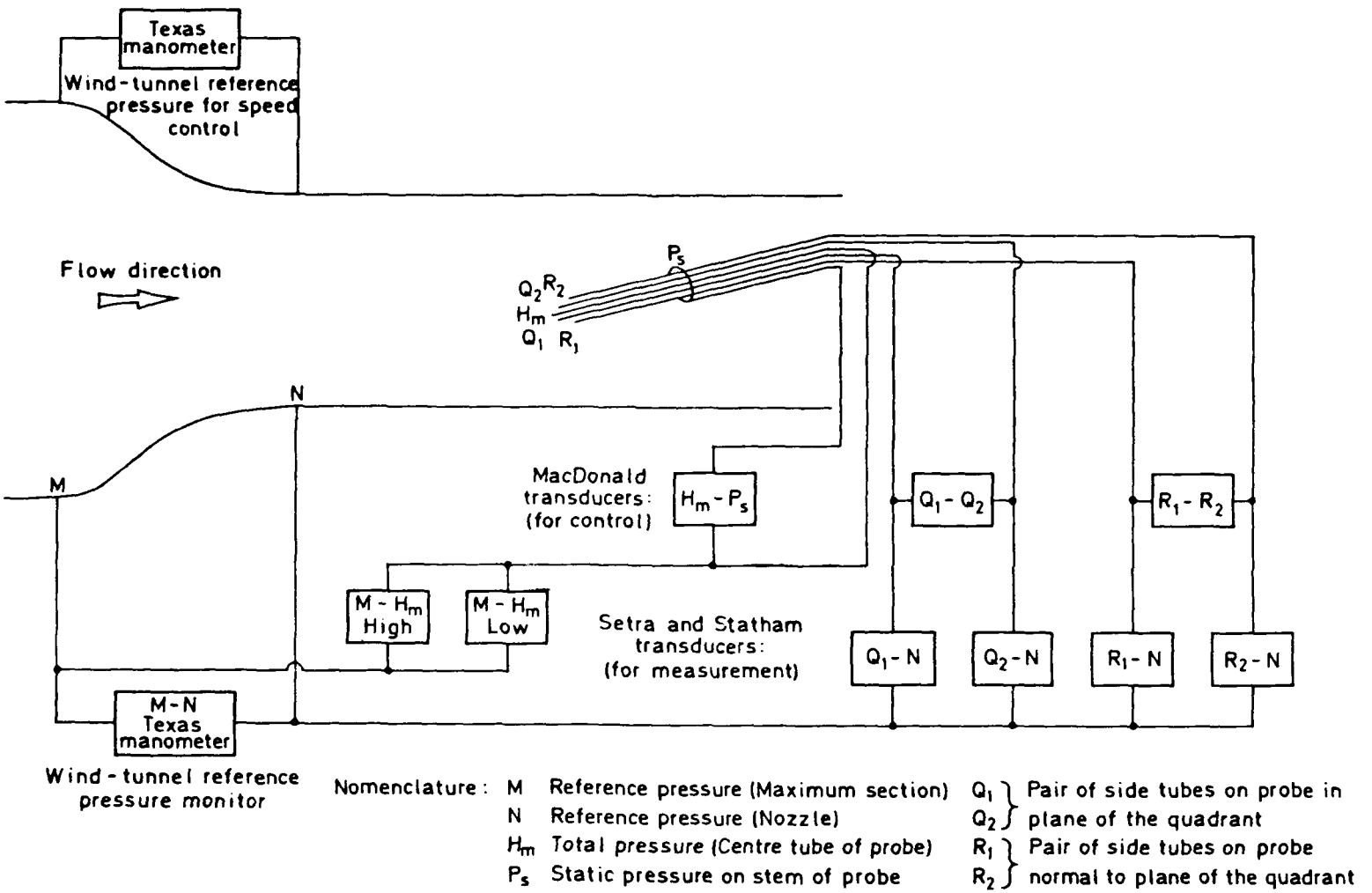

Fig 4 Pressure connection diagram for the measurement of velocity vectors

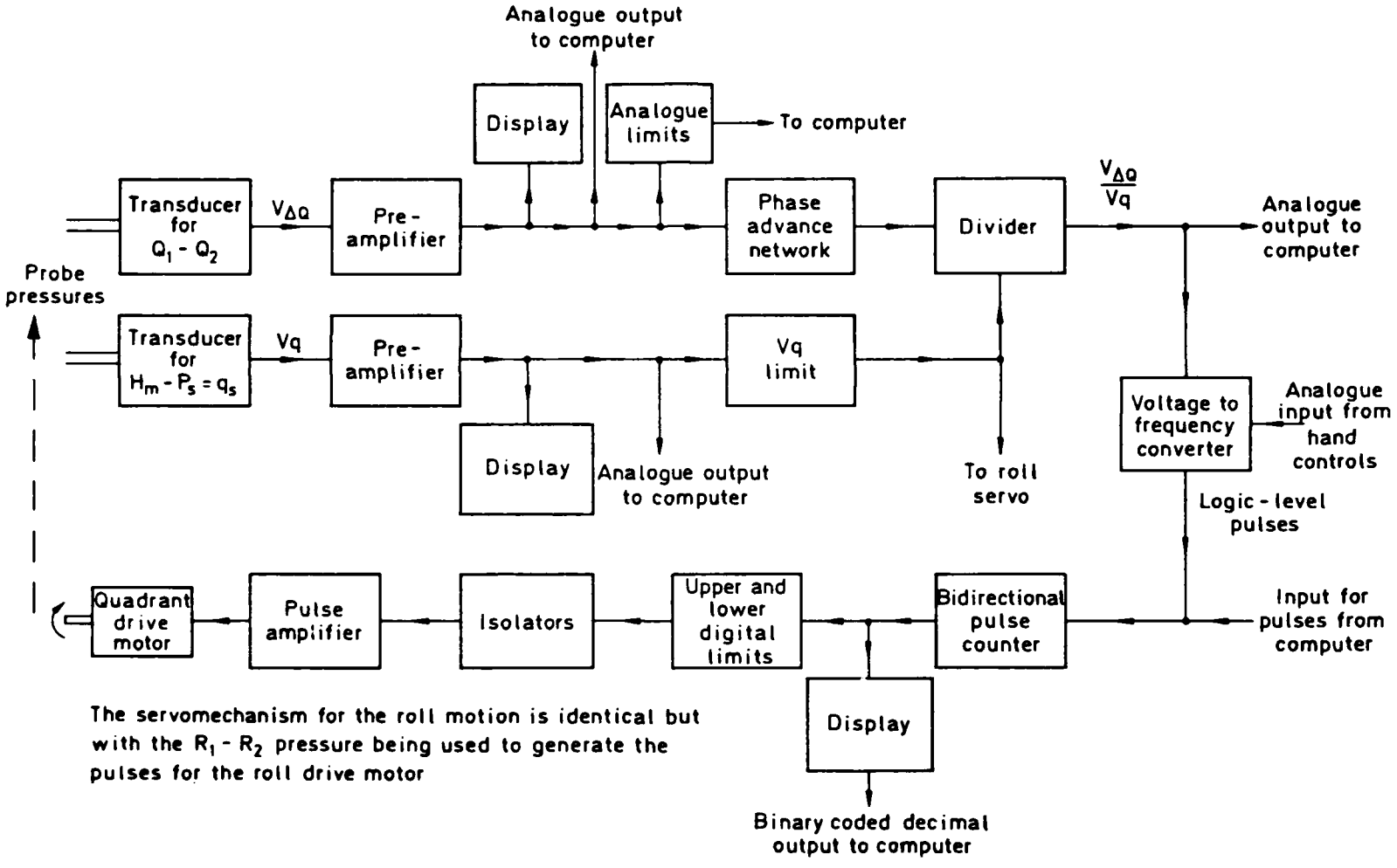

Fig 5 Block diagram of the servomechanism for controlling the quadrant motion

Fig 6

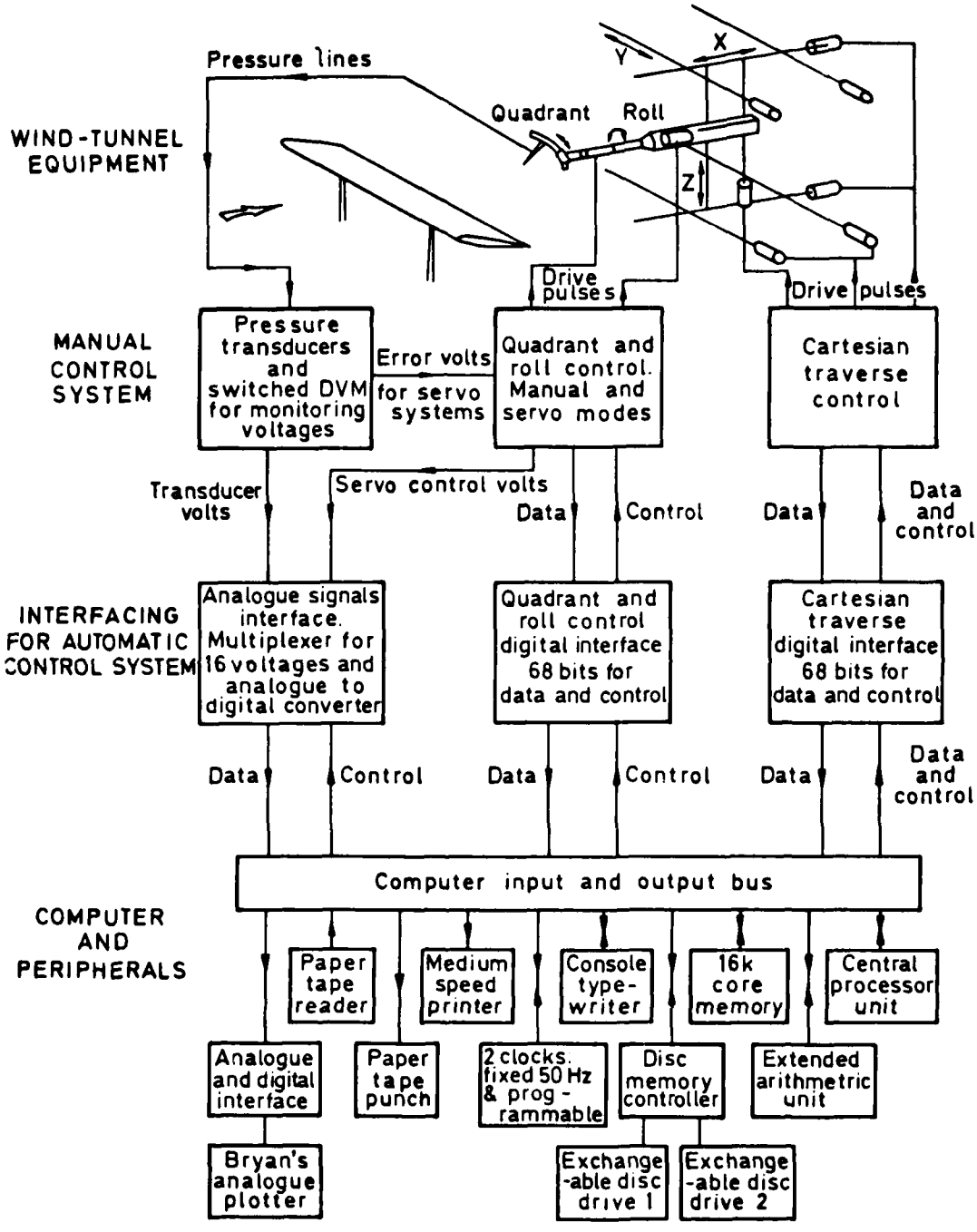

Fig 6 Schematic diagram of the method of implementing computer control of the traverse systems

TR 80078

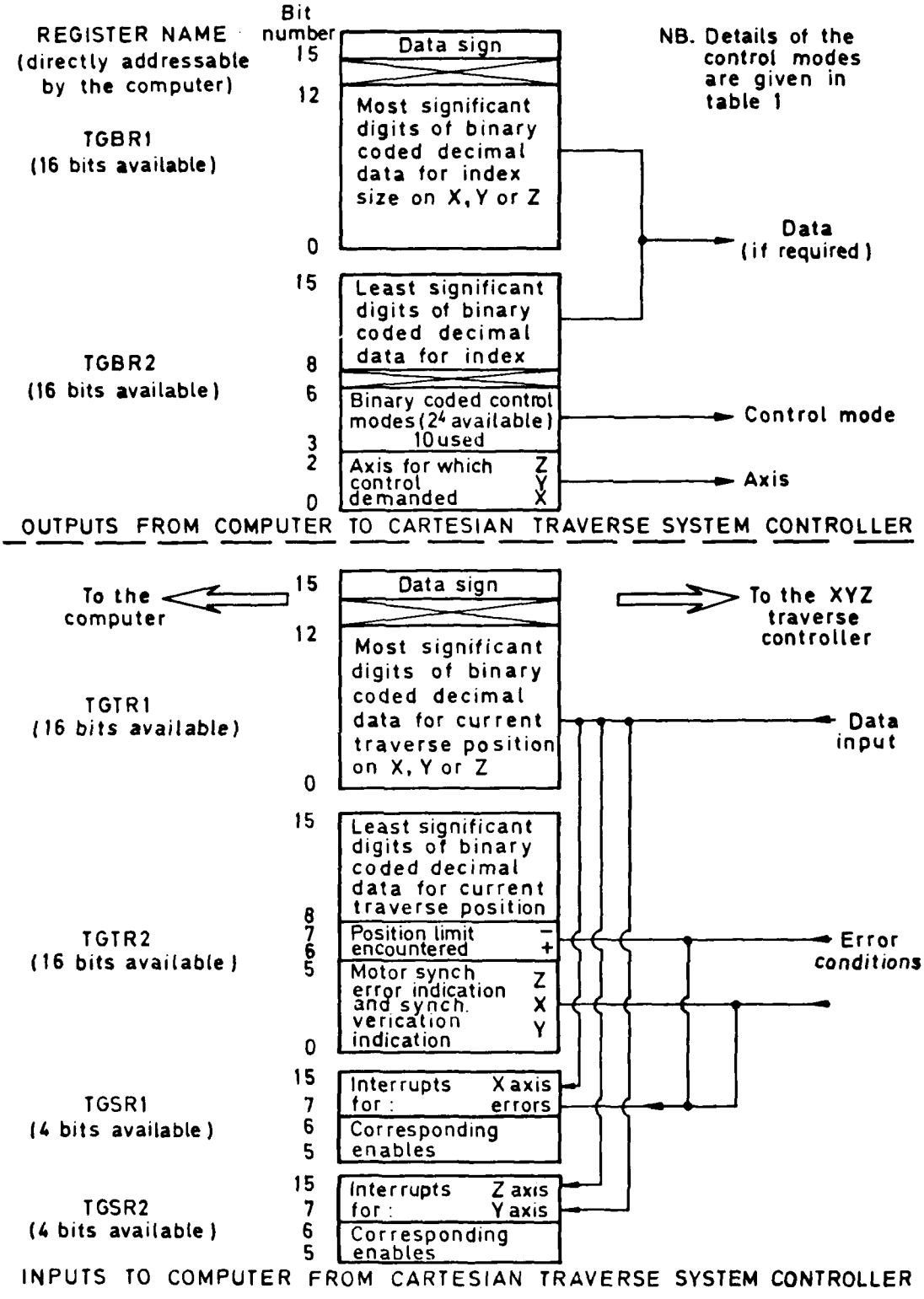

Fig 7 Schematic diagram of the interface for the cartesian-traverse control system

Fig 8

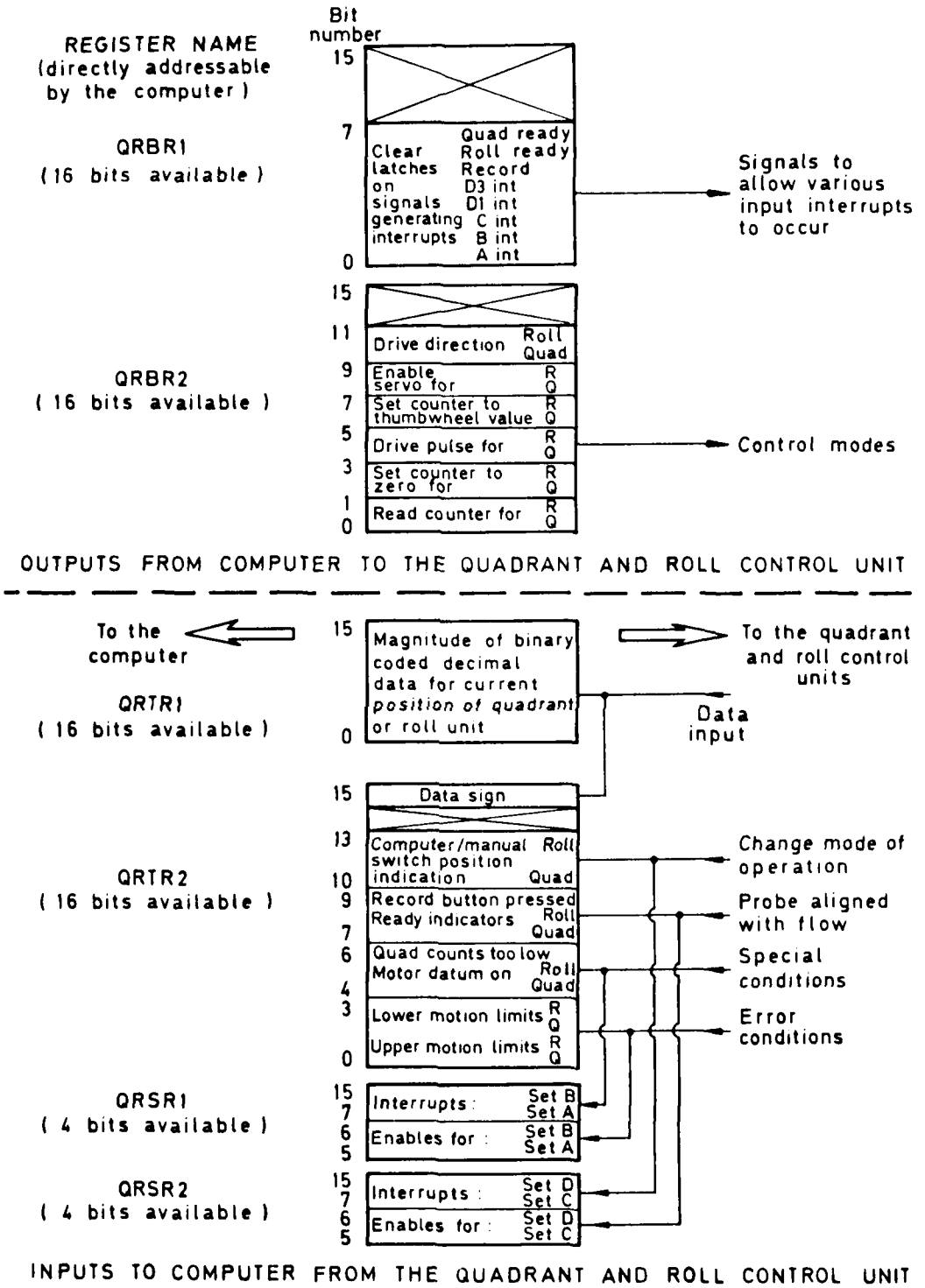

Fig 8 Schematic diagram of the interface for the quadrant and roll control unit

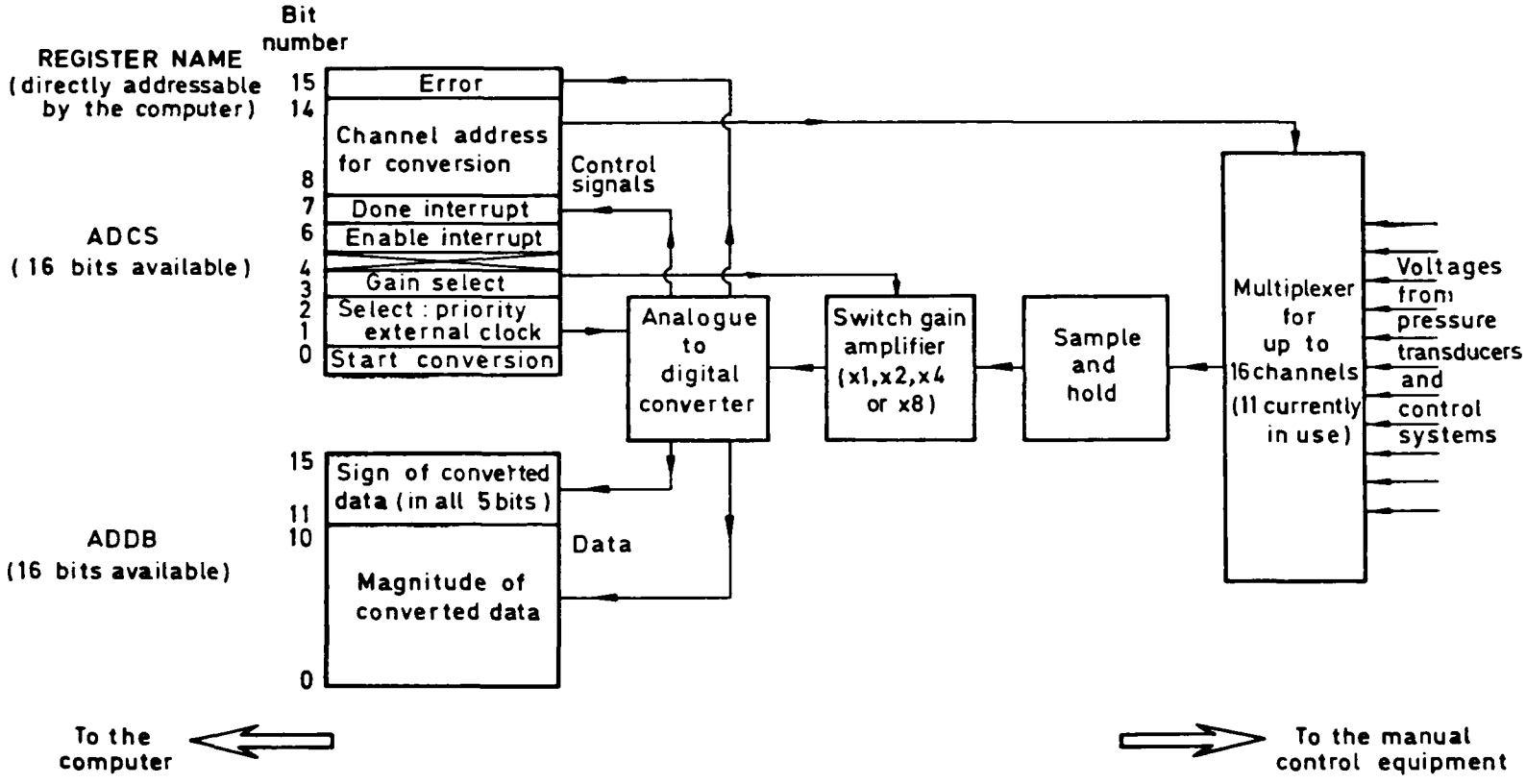

INPUTS TO THE COMPUTER FROM THE MANUAL CONTROL EQUIPMENT

NB. The signal voltages input to the mutiplexer are tabulated in table 2

Fig 9 Schematic diagram of the interface for analogue inputs to the computer

Fig 10

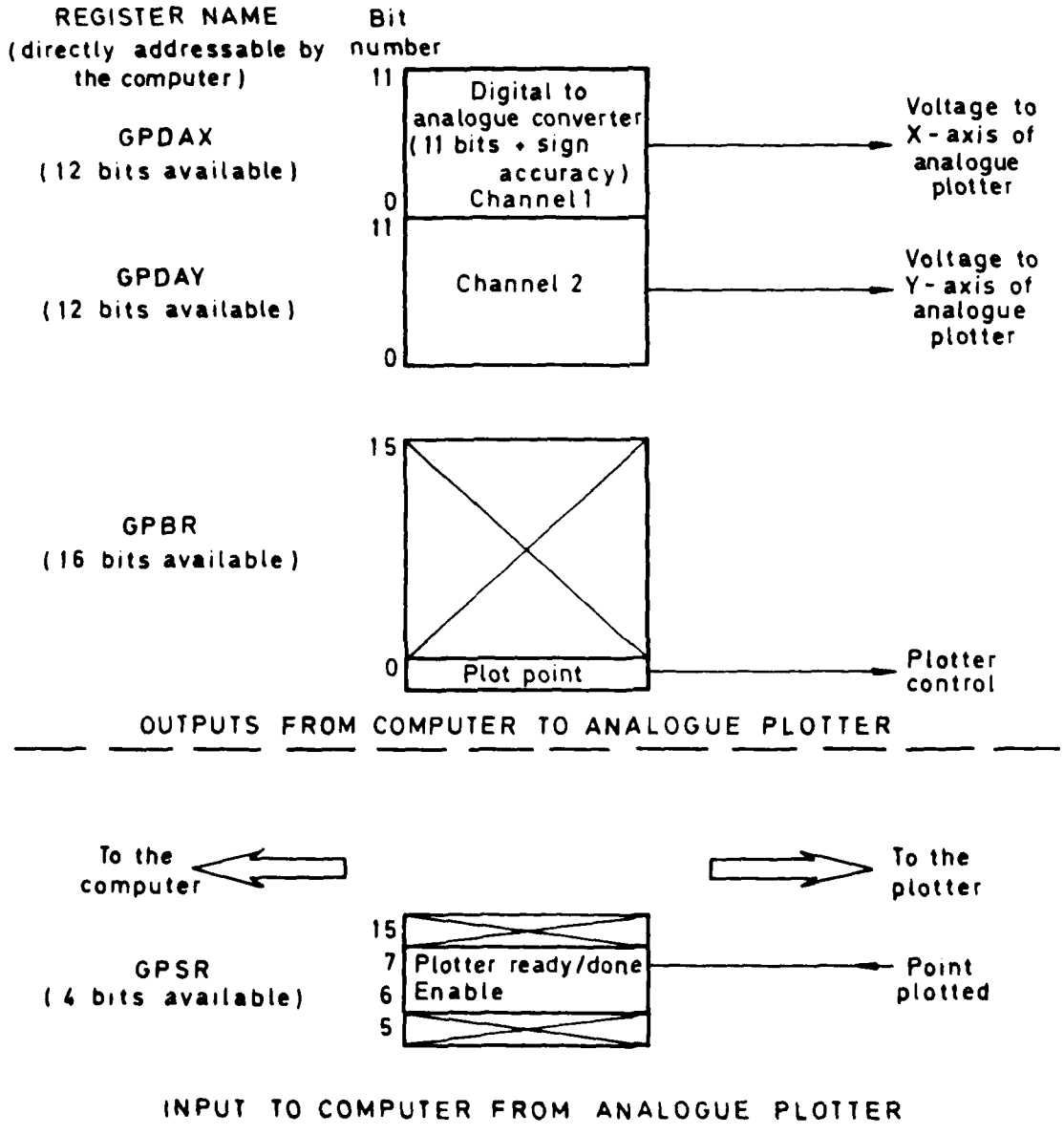

Fig 10 Schematic diagram of the interface for the analogue plotter

TR 80078

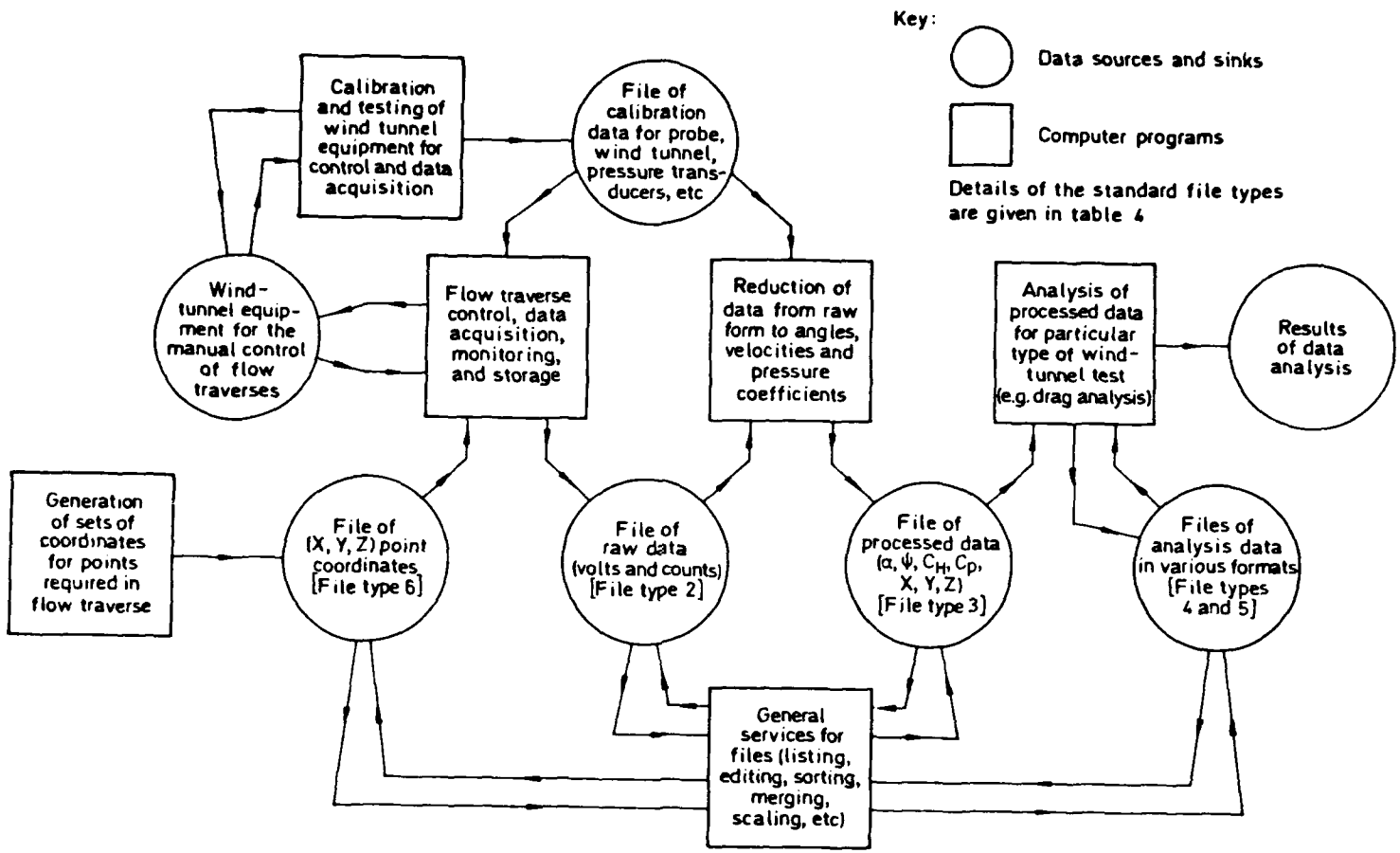

Fig 11 Organisation of the data flow for flow-field measurements using the automatic traverse system

Fig 12

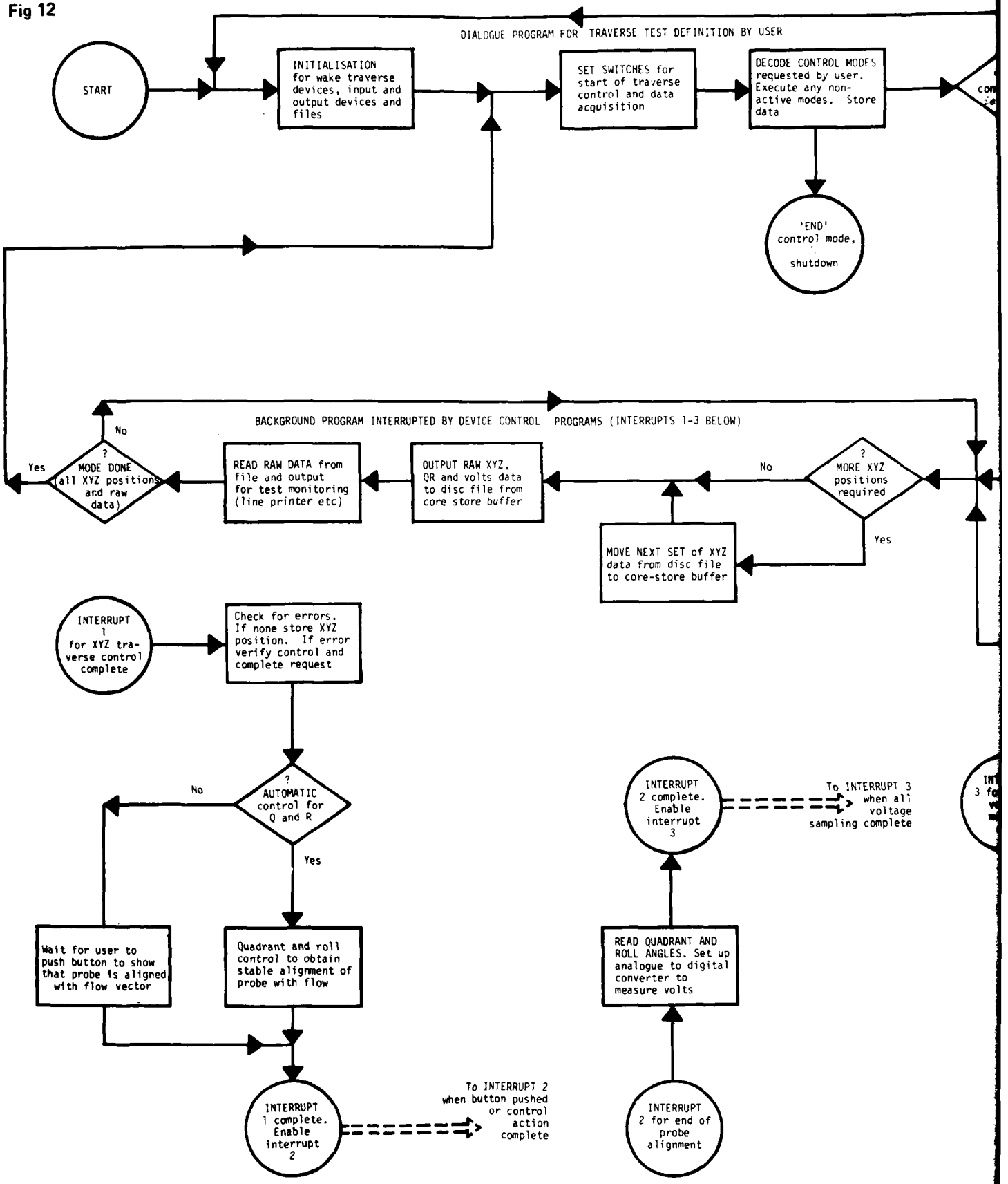

Fig 12 Simplified flow chart for the tra

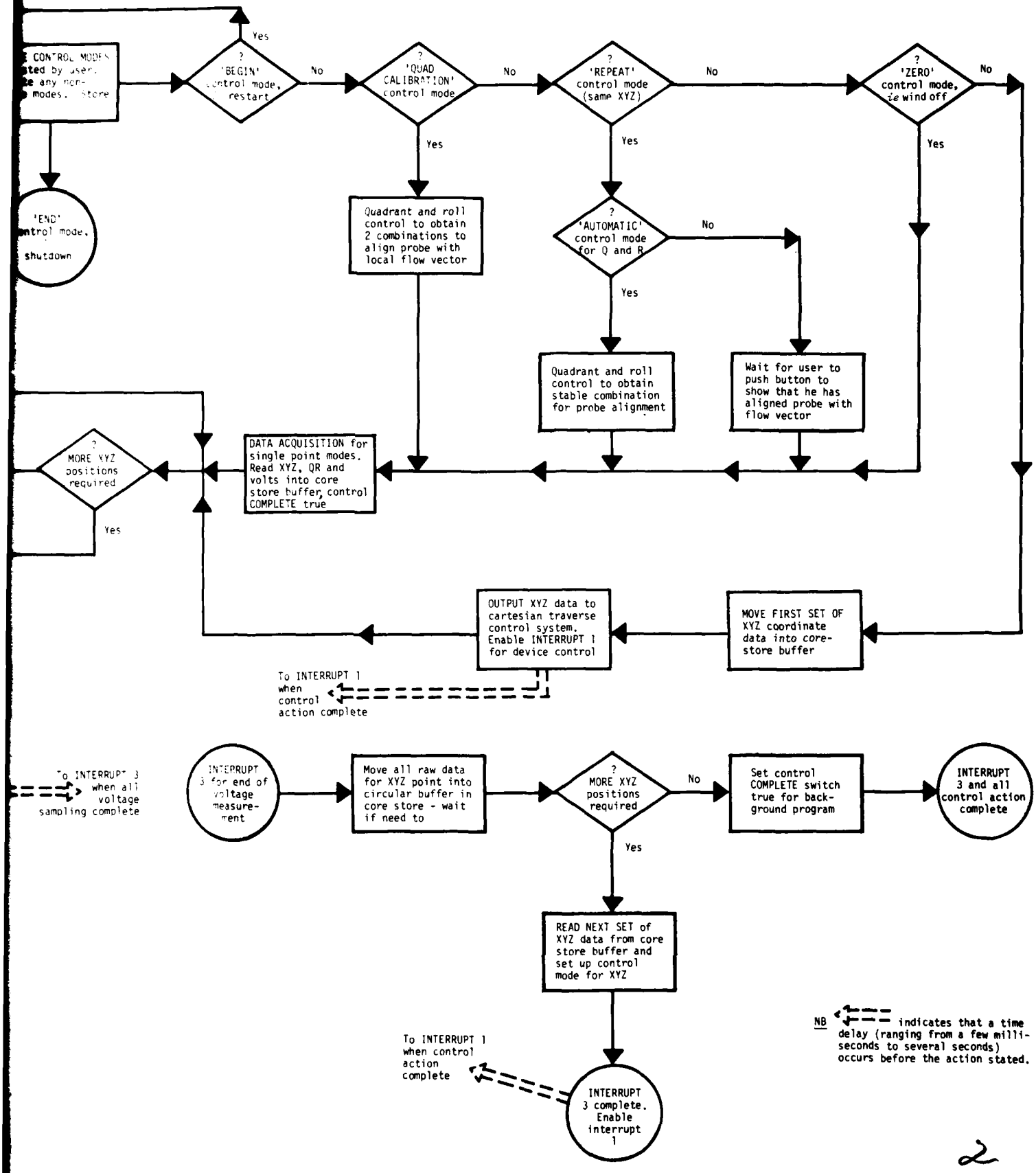

2

ified flow chart for the traverse control program

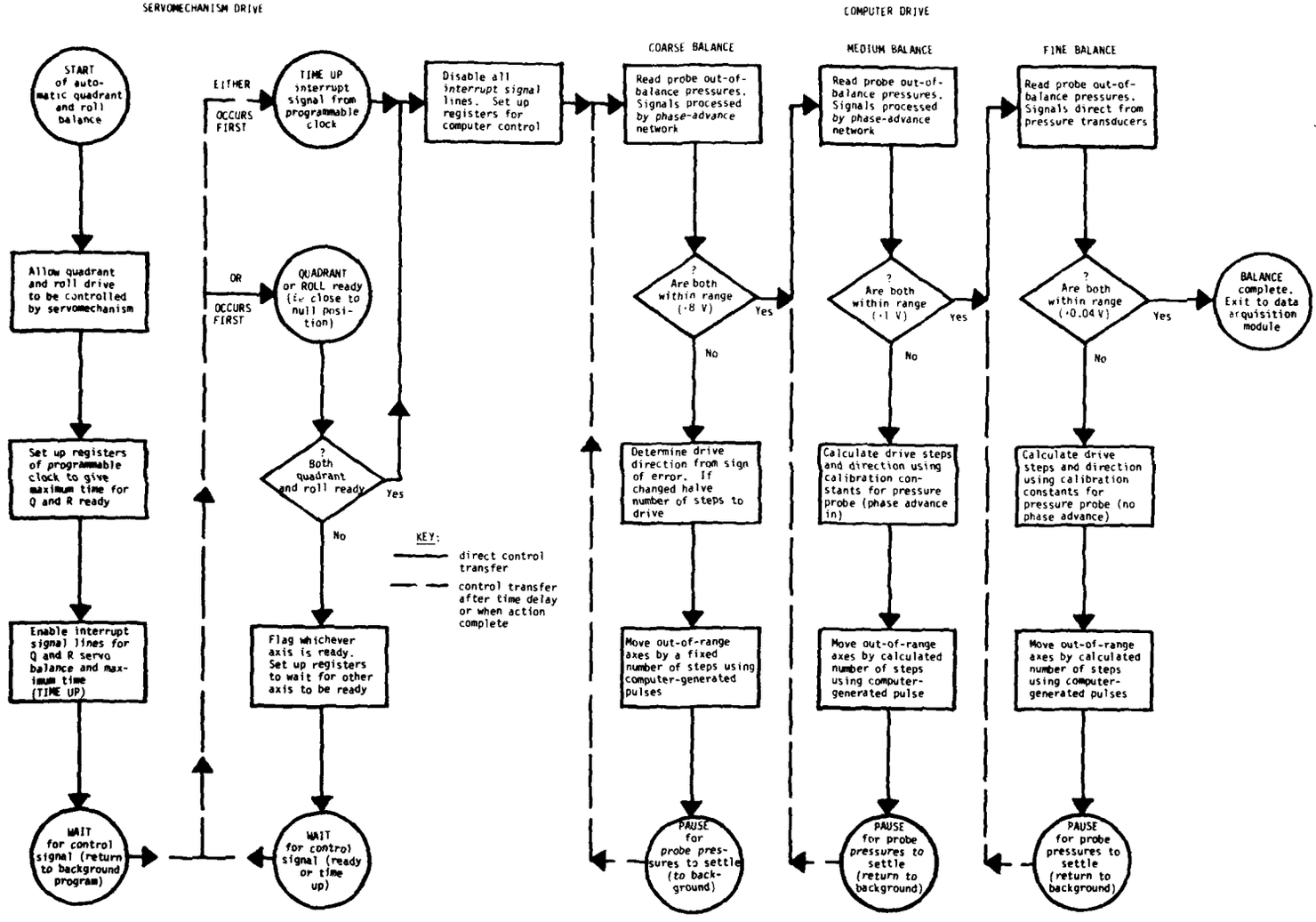

Fig 13 Simplified flow chart for the automatic control of the quadrant and roll units

Fig 14a-c

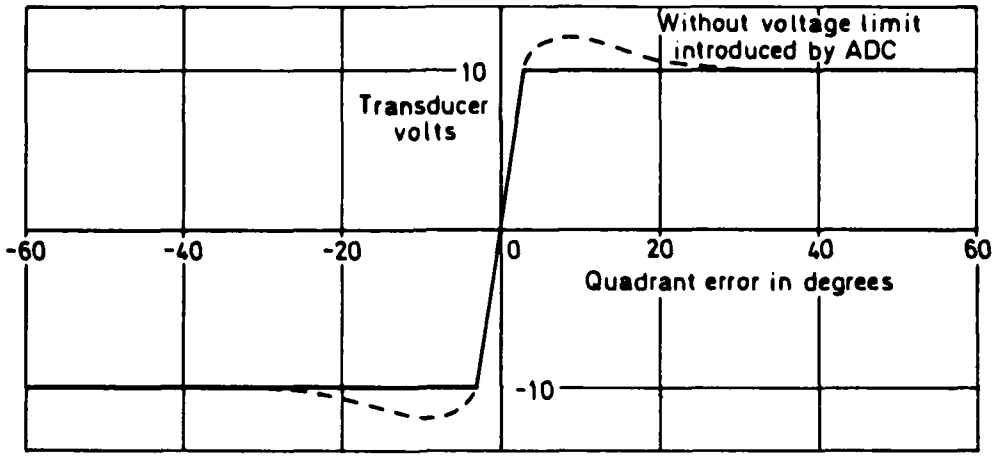

a Calibration of quadrant error - transducer (for all roll angles)

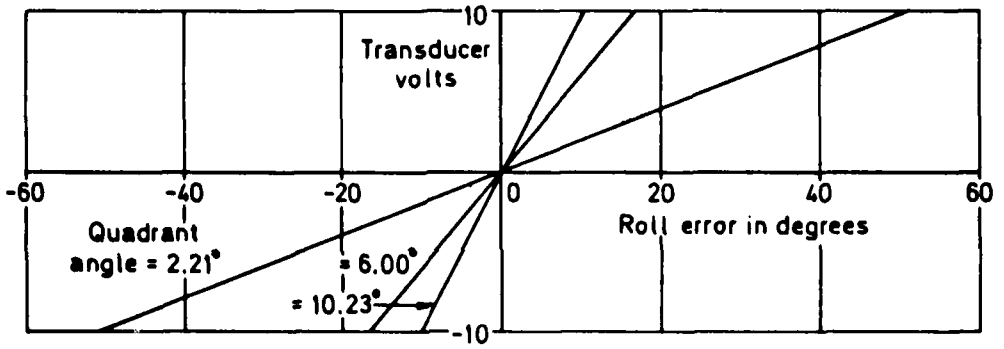

b Calibration of roll error - transducer (for 3 quadrant angles)

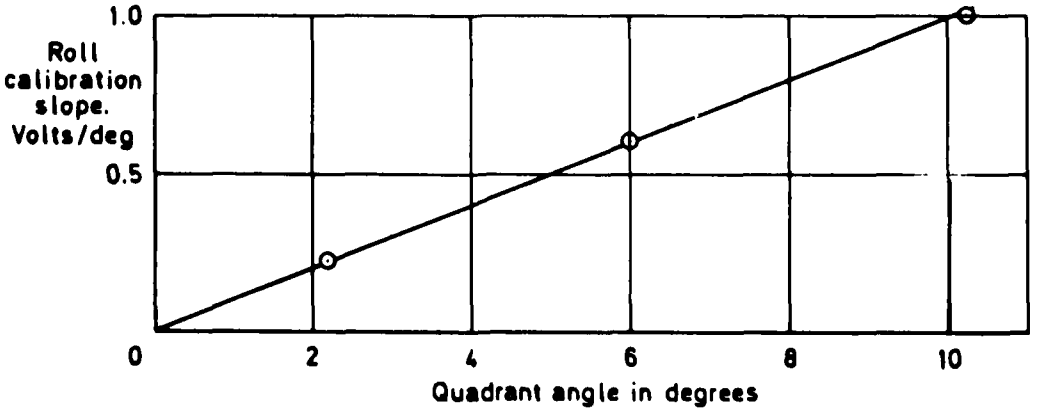

c Variation of the slope of the roll calibration with quadrant angle

Fig 14a-c Calibration of probe-balancing transducers with respect to quadrant and roll error angles (free stream velocity 75 m/s)

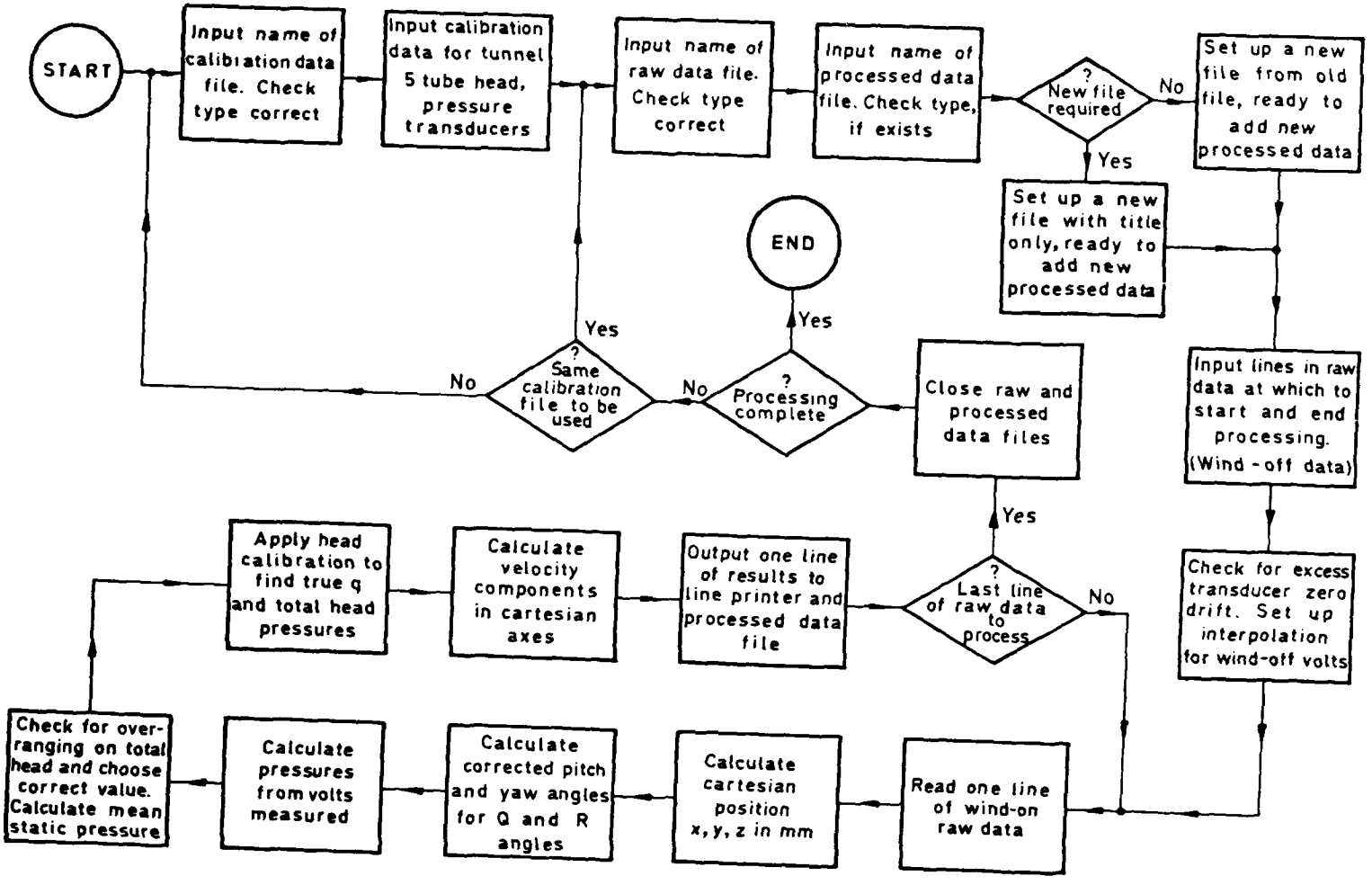

Fig 15 Flow chart for the reduction of raw data

Fig 16a&b

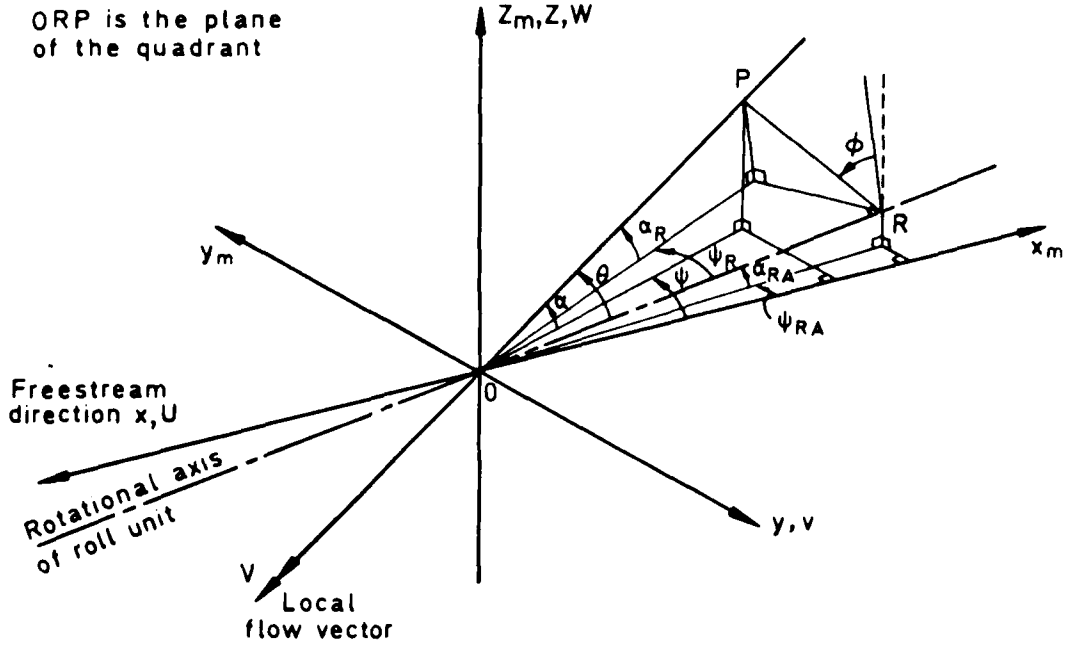

a Nomenclature used for the raw and processed wake-traverse data

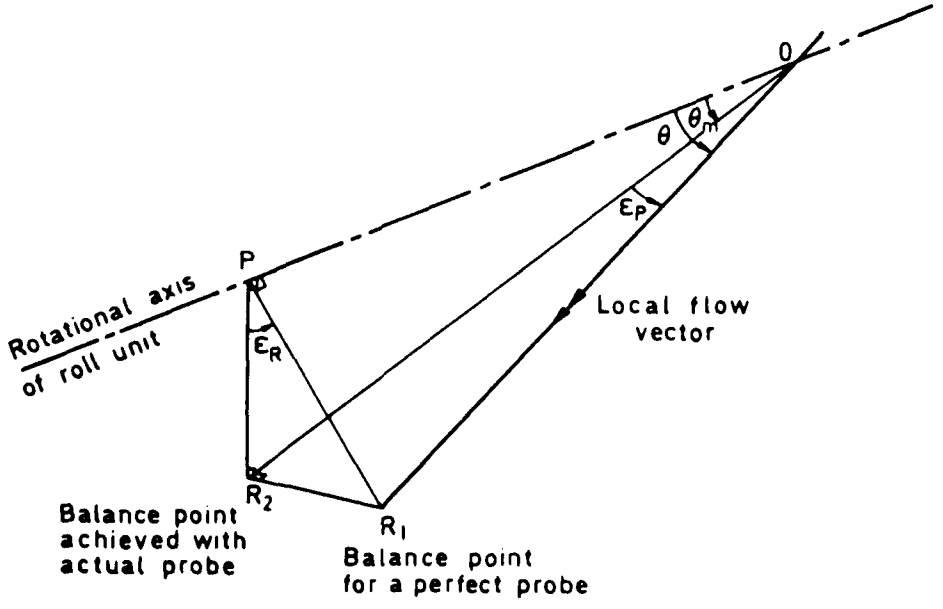

b Nomenclature for deriving the angular correction for roll due to probe asymmetry

Fig 16a&b Nomenclature used in the reduction of raw data

TR 80078

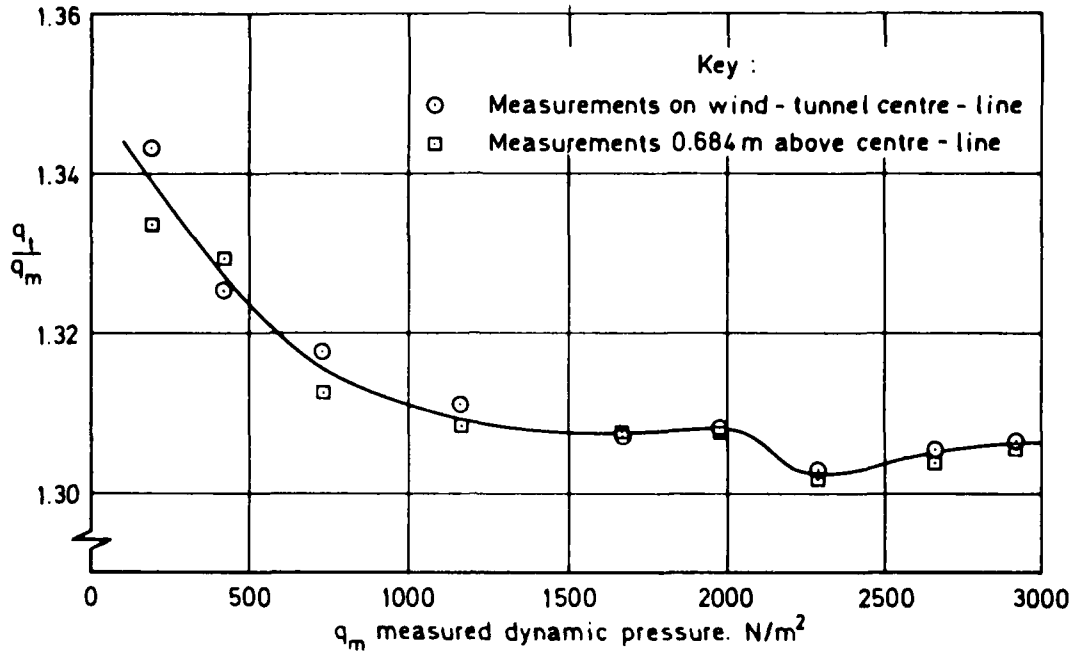

a Speed calibration of 5 - tube pressure probe

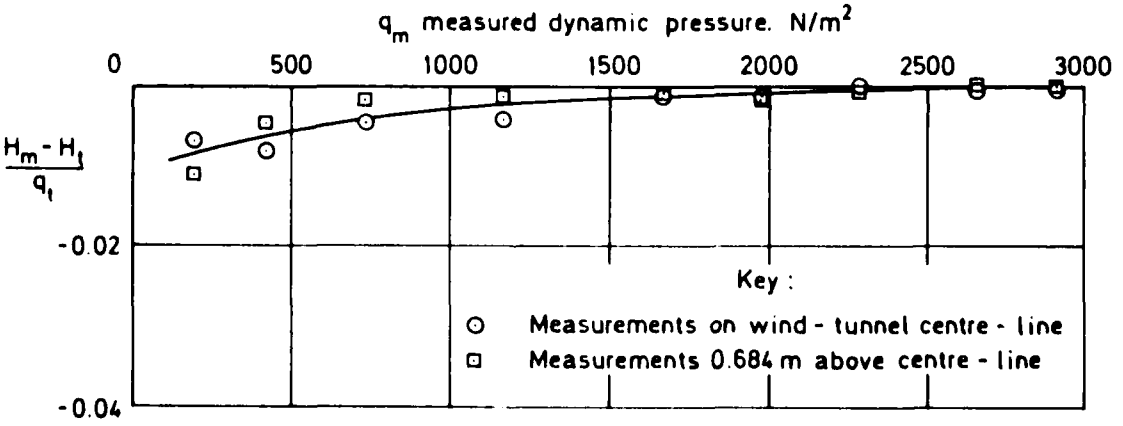

b Total head calibration of 5 - tube pressure probe

N.B. The measured dynamic pressure, $q_m = H_m - \frac{1}{4}(Q_1 + Q_2 + R_1 + R_2)$ where Q_1, Q_2, R_1 and R_2 are the pressures on the 4 side tubes of the probe, and H_m is the measured total head pressure

q_t and H_t are the true dynamic and total - head pressures

I n 80078

Fig 17a&b Calibration of the pressure-measurement probe. Variation of the true dynamic and total pressures with the measured dynamic pressure

Fig 18

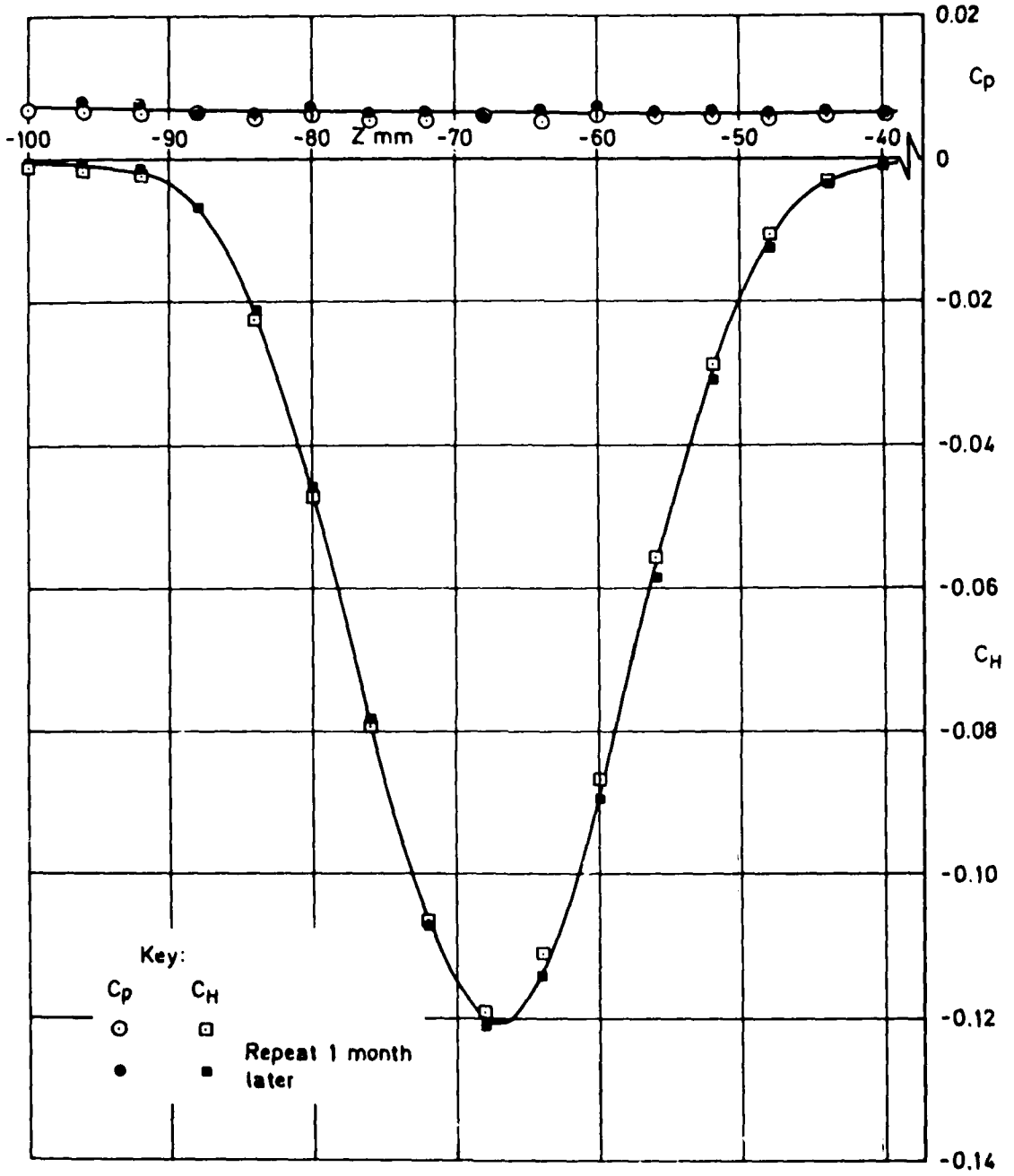

Z traverse 200 mm spanwise from the centre line and 803 mm downstream of the trailing edge of a rectangular wing

Fig 18 Typical experimental measurements of static and total pressure coefficients

TR 80078

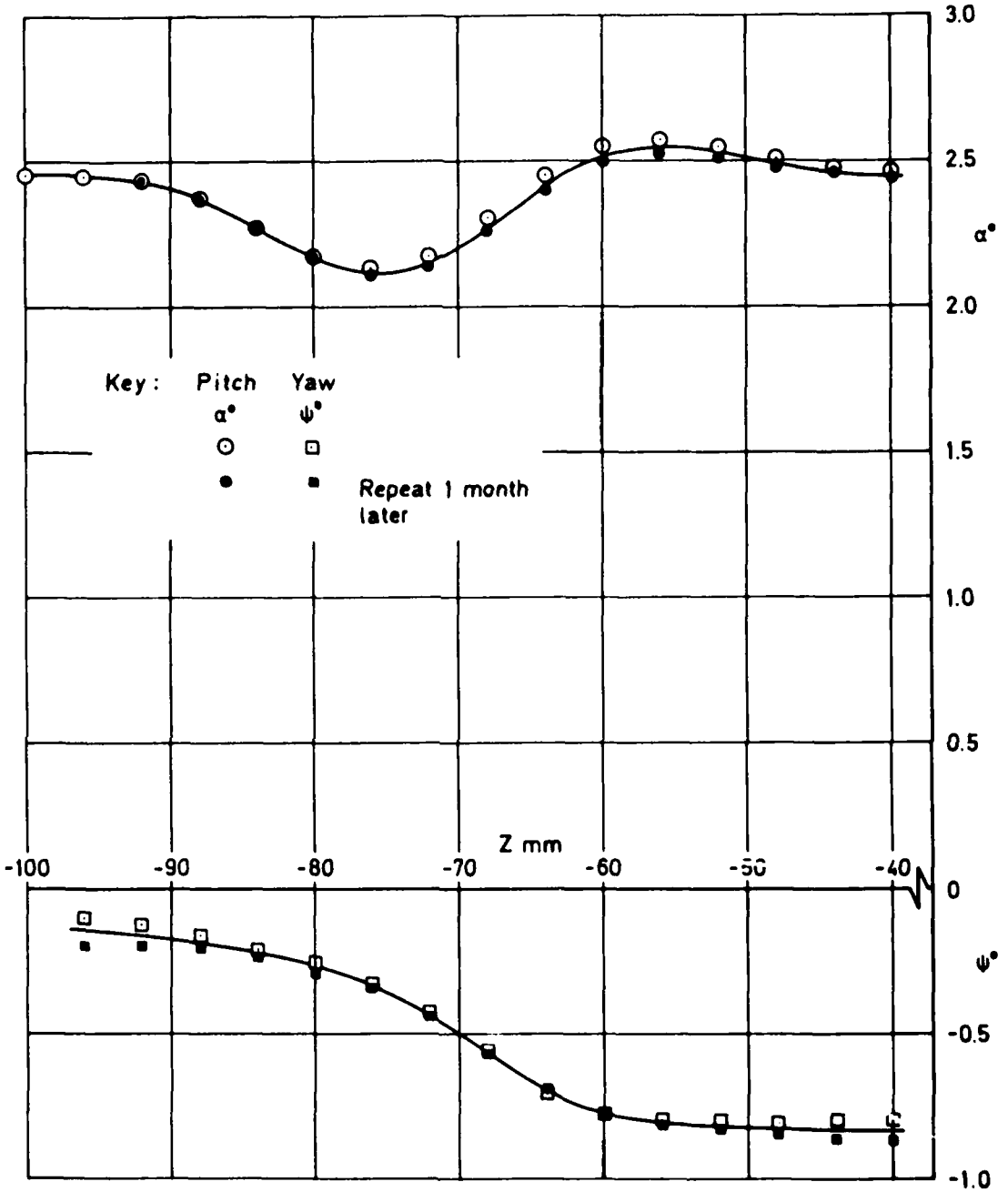

Z traverse 200 mm spanwise from the centre line and 803 mm downstream of the trailing edge of a rectangular wing

TR 80078

Fig 19 Typical experimental measurements of pitch and yaw angles

[illegible]

As far as possible this page should contain only [illegible] above must be marked to indicate the classification, e.g. [illegible]

1. DRIC Reference (to be added by DRIC)	2. Originator's Reference	3. [illegible]	4. [illegible]
	RAE TR 80078	N/A	[illegible]

5. DRIC Code for Originator	6. Originator (Corporate Author) [illegible]
7673000W	Royal Aircraft Establishment, [illegible]
5a. Sponsoring Agency's Code	**6a. Sponsoring Agency (Contract Authority) [illegible]**
N/A	N/A

7. Title An automatic wake-traverse system for flow-field [illegible] low-speed wind tunnels

7a. (For Translations) Title in Foreign Language

7b. (For Conference Papers) Title, Place and Date of Conference

8. Author 1. Surname, Initials	9a. Author 2	9b. Authors 3, 4	10. [illegible]
Lovell, D.A.			[illegible]
11. Contract Number	**12. Period**	**13. Project**	**14. [illegible]**
N/A	N/A		[illegible]

15. Distribution statement
(a) Controlled by –
(b) Special limitations (if any) – UNLIMITED

16. Descriptors (Keywords) (Descriptors marked * are selected from TEST)

Experimental aerodynamics. Computer-based control. [illegible]

17. Abstract

The development of a computer-controlled system for [illegible] ments of flow fields is described. The nature and [illegible] ware components, a Cartesian traverse system, a [illegible] and the interfaces to allow control of these [illegible] The associated software for control and data handling [illegible] significance of corrections to be applied to the [illegible] discussed and, on the basis of some preliminary [illegible] is made of the typical accuracy of measurement [illegible] The system has a capability of making 100 [illegible] with a minimum of operator intervention, and thus [illegible] the experimental aerodynamicist.

1/0165

RAE Form A143

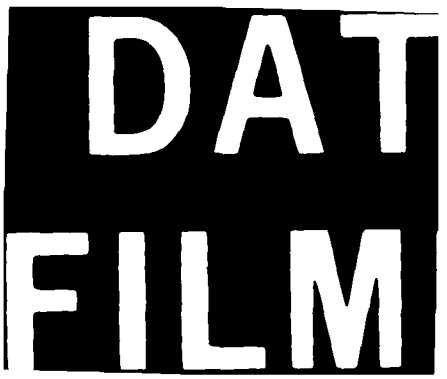
DAT
FILM